Standard Details
Sewer & Stormwater

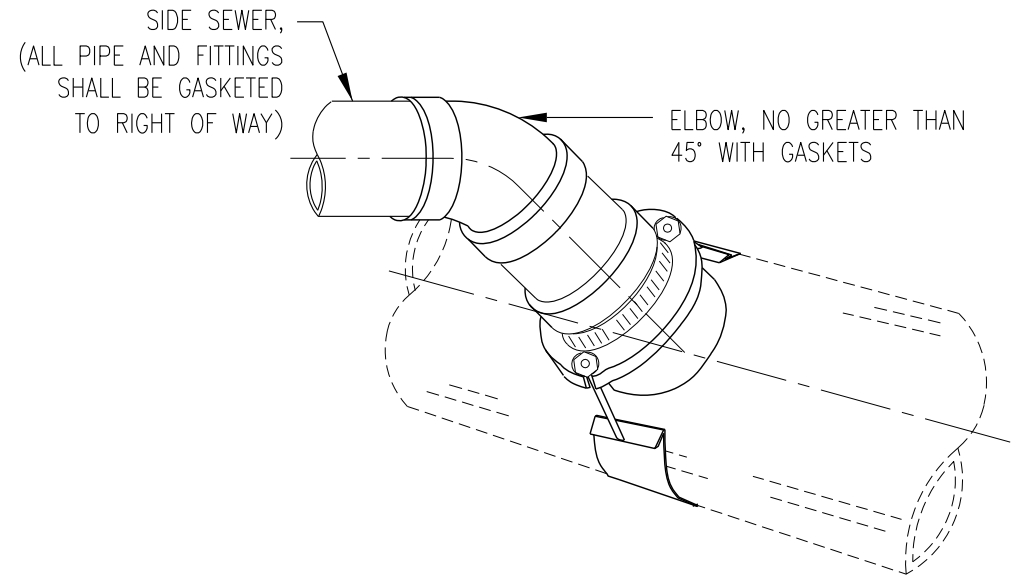

ISOMETRIC

NOTE:

1. HOLE IN MAIN SHALL BE CORE DRILLED AND MATCH THE INSIDE DIAMETER OF SADDLE WHERE IT ATTACHES TO MAIN.

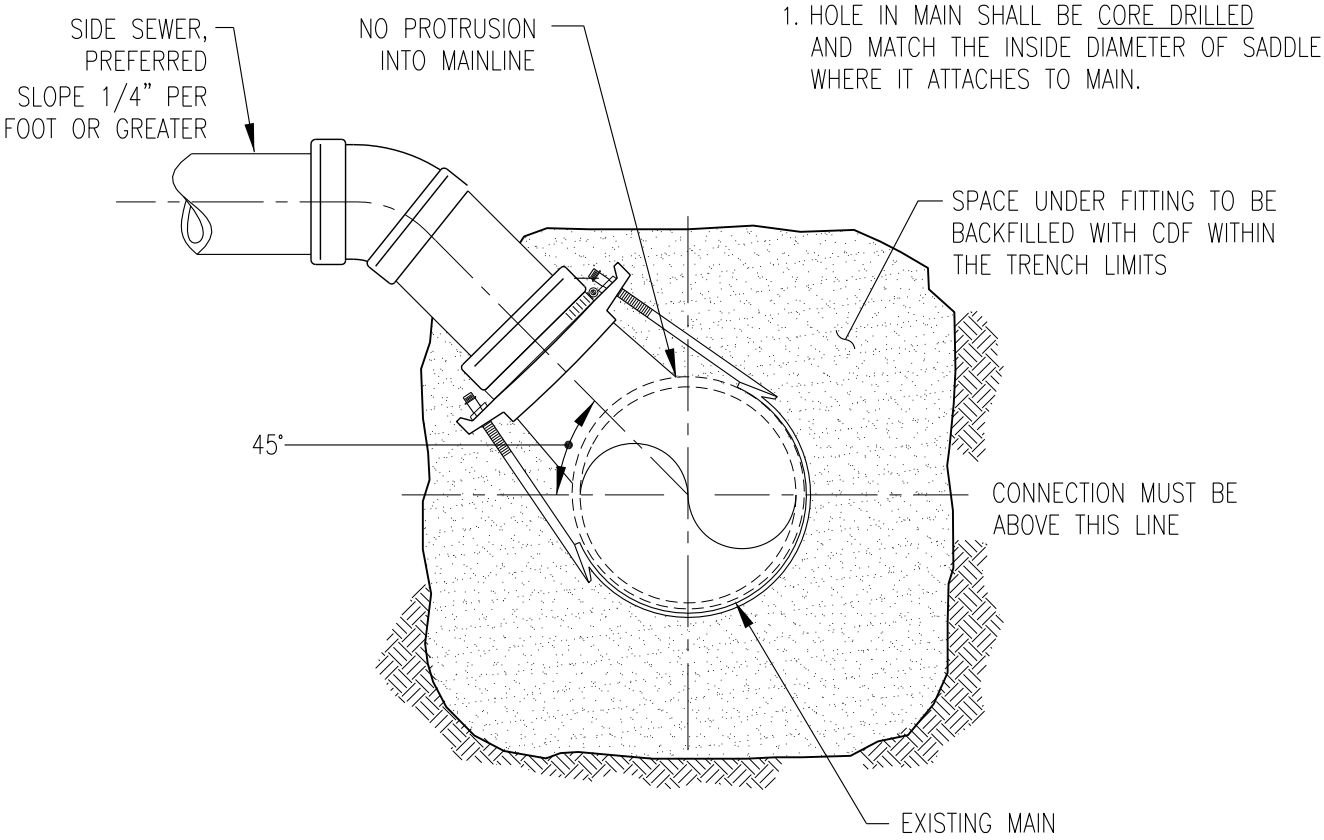

SECTION

Richland Washington	SEWER SERVICE SADDLE CONNECTION TO EXISTING MAIN	PUBLIC WORKS ENGINEERING
		APPR. BY: PKR — DATE: 02.2012
		DRAWN BY: JKS — DWG: S1
		CAD FILE: 2012_S1_02_2012

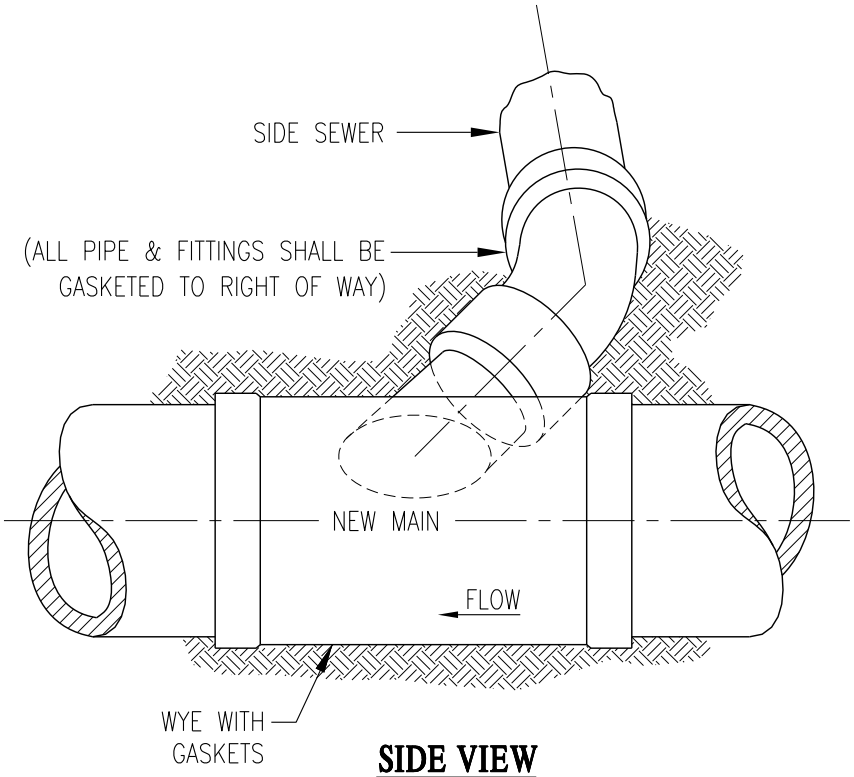

SIDE VIEW

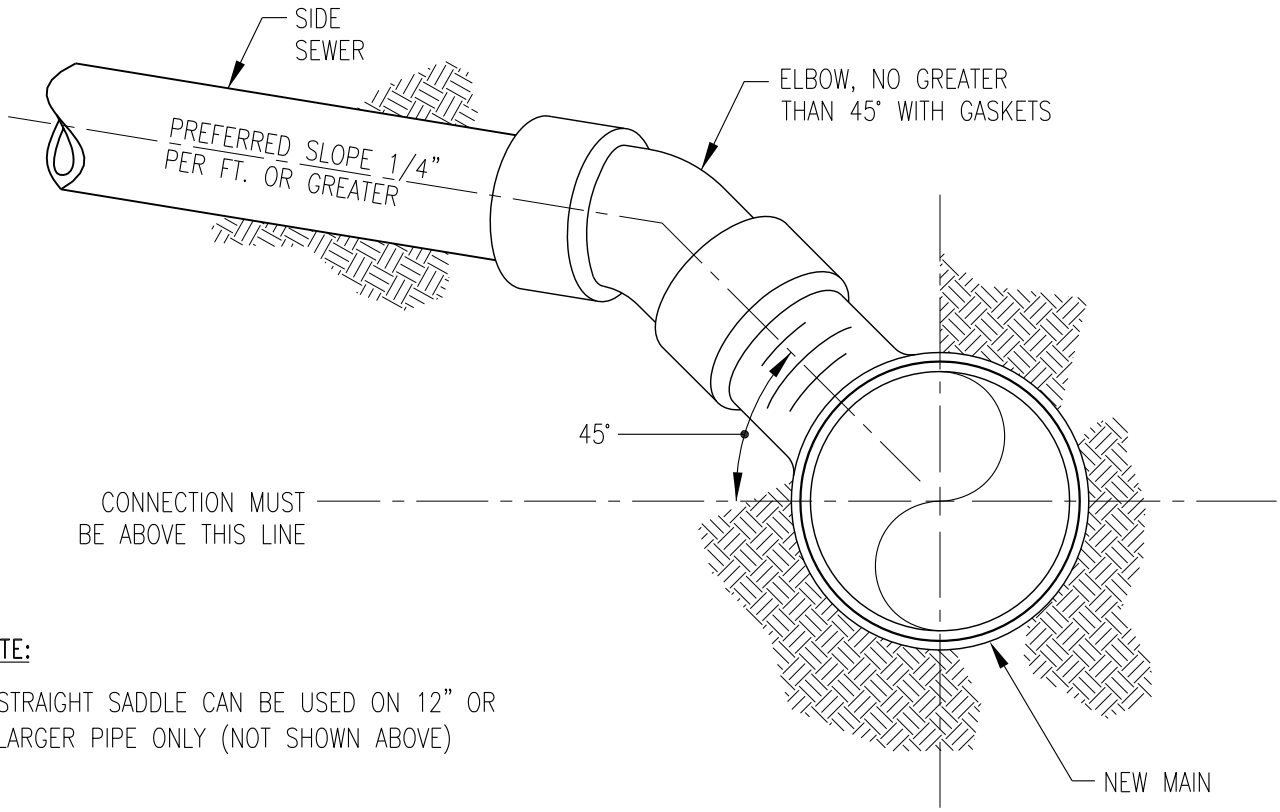

SECTION

NOTE:

1. STRAIGHT SADDLE CAN BE USED ON 12" OR LARGER PIPE ONLY (NOT SHOWN ABOVE)

Richland Washington

SEWER WYE CONNECTION TO NEW MAIN

PUBLIC WORKS ENGINEERING	
APPR. BY: PKR	DATE: 02.2012
DRAWN BY: JKS	DWG: S2
CAD FILE: 2012_S2_02_2012	

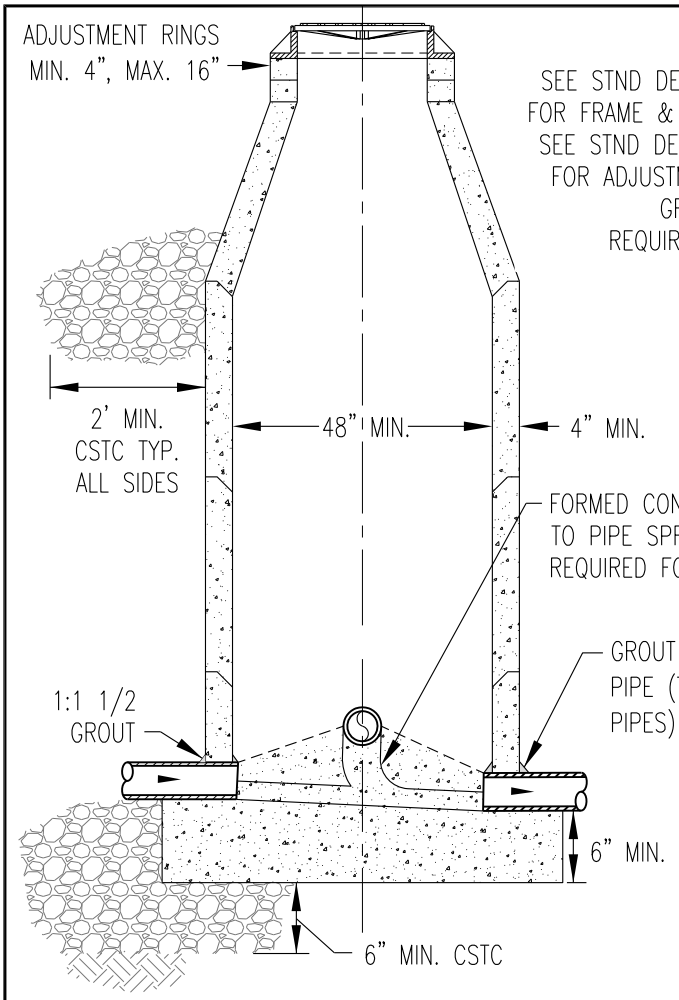

SECTION A-A

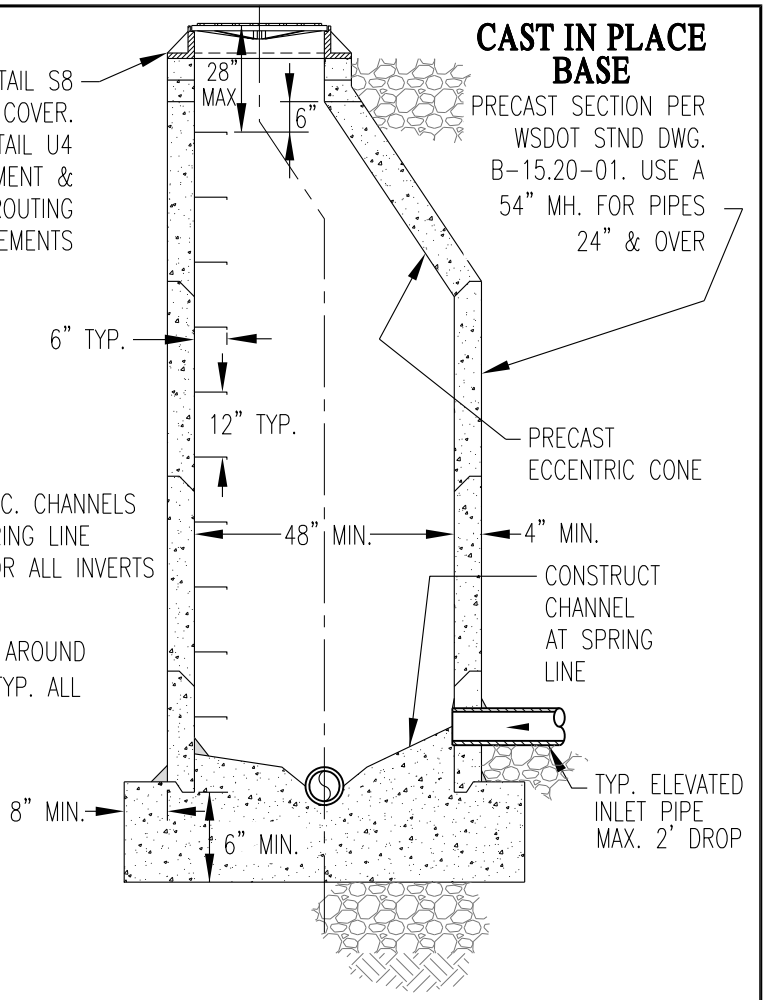

SECTION B-B

NOTES:

1. FOR NEW MAINLINE PIPES: PROVIDE A MINIMUM 0.10 FOOT IN-OUT DROP FOR STRAIGHT RUN AND 0.20 FOOT IN-OUT DROP FOR ANGLE RUNS. PIPES OF DIFFERENT SIZES SHALL ALIGN CROWN TO CROWN.
2. IN GROUNDWATER INSTALLATIONS: ALL MANHOLE JOINTS SHALL BE MADE USING A CONTINUOUS FLEXIBLE RUBBER MANHOLE GASKET JOINT. ALL HOLES JOINTS CONNECTIONS SHALL BE SEALED WITH GROUT ON THE OUTSIDE.
3. A SHALLOW MANHOLE SHALL BE USED WHEN IT'S DEPTH IS 5.5' OR LESS FROM INVERT TO TOP OF RIM.
4. STEPS SHALL BE PLACED OVER BENCH, NOT OBSTRUCTING ANY CHANNEL. MANHOLE STEPS SHALL CONFORM TO AASHTO M199 AND MEET ALL WISHA REQUIREMENTS. STEPS REQUIRED ON SANITARY SEWER ONLY. IF BENCH LESS THAN 1' IN WIDTH, PLACE LADDER OVER DOWNSTREAM PIPE.
5. CHANNEL INTERSECTIONS SHALL BE SMOOTH AND DIRECTED DOWNSTREAM.

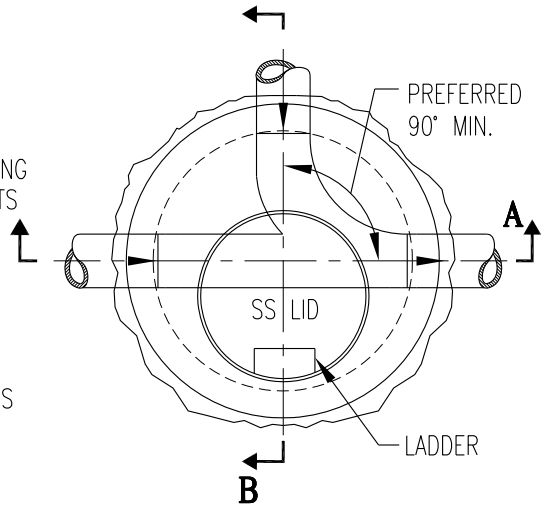

PLAN

Richland Washington

STANDARD MANHOLE (W/CAST IN PLACE BASE)

PUBLIC WORKS ENGINEERING	
APPR. BY: PKR	DATE: 04.16
DRAWN BY: LD	DWG: S3
CAD FILE: 2013_S3_04_2016	

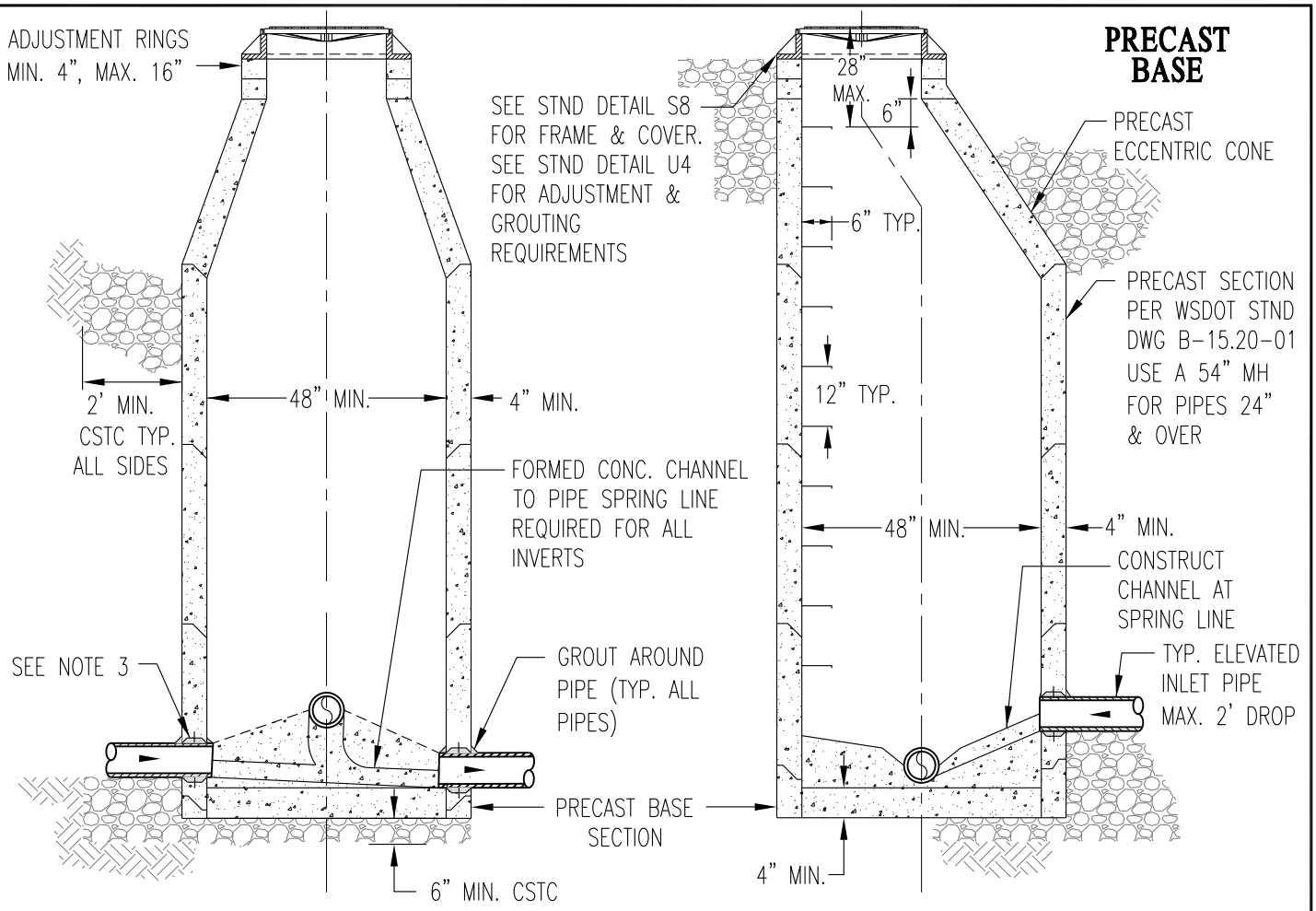

SECTION A-A **SECTION B-B**

NOTES:

1. PROVIDE A MINIMUM 0.10 FOOT IN-OUT DROP FOR STRAIGHT RUN AND 0.20 FOOT IN-OUT DROP FOR ANGLE RUNS. PIPES OF DIFFERENT SIZES SHALL ALIGN CROWN TO CROWN.
2. IN GROUNDWATER INSTALLATIONS: ALL MANHOLE JOINTS SHALL BE MADE USING A CONTINUOUS FLEXIBLE RUBBER MANHOLE GASKET JOINT. ALL HOLES, JOINTS, CONNECTIONS SHALL BE SEALED WITH GROUT ON THE OUTSIDE.
3. ALL NEW PRECAST MANHOLE SECTIONS SHALL BE PROVIDED WITH CAST-IN FLEXIBLE PIPE CONNECTORS.
   NO PIPE PENETRATIONS ALLOWED INTO PRECAST CONE SECTIONS.
4. A SHALLOW MANHOLE SHALL BE USED WHEN IT'S DEPTH IS 5.5' OR LESS FROM INVERT TO TOP OF RIM.
5. STEPS SHALL BE PLACED OVER BENCH, NOT OBSTRUCTING ANY CHANNEL. MANHOLE STEPS SHALL CONFORM TO AASHTO M199 AND MEET ALL WISHA REQUIREMENTS. STEPS REQUIRED ON SANITARY SEWER ONLY. IF BENCH LESS THAN 1' IN WIDTH, PLACE LADDER OVER DOWNSTREAM PIPE.
6. CHANNEL INTERSECTIONS SHALL BE SMOOTH AND DIRECTED DOWNSTREAM.

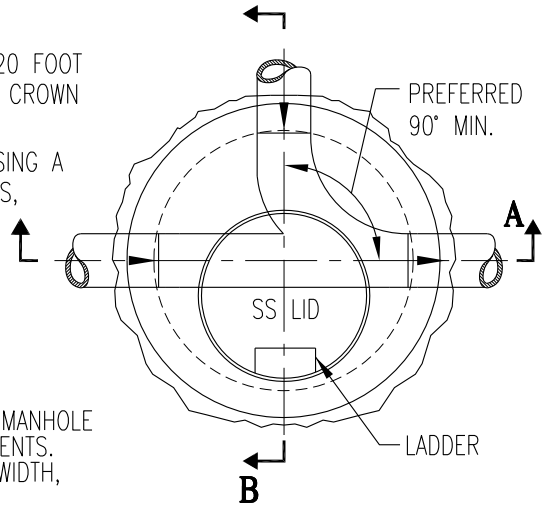

PLAN

Richland Washington

STANDARD MANHOLE (W/PRECAST BASE)

PUBLIC WORKS ENGINEERING	
APPR. BY: PKR	DATE: 07.17
DRAWN BY: LD	DWG: S4
CAD FILE: 2014_S4_07_2017	

CAST IN PLACE BASE

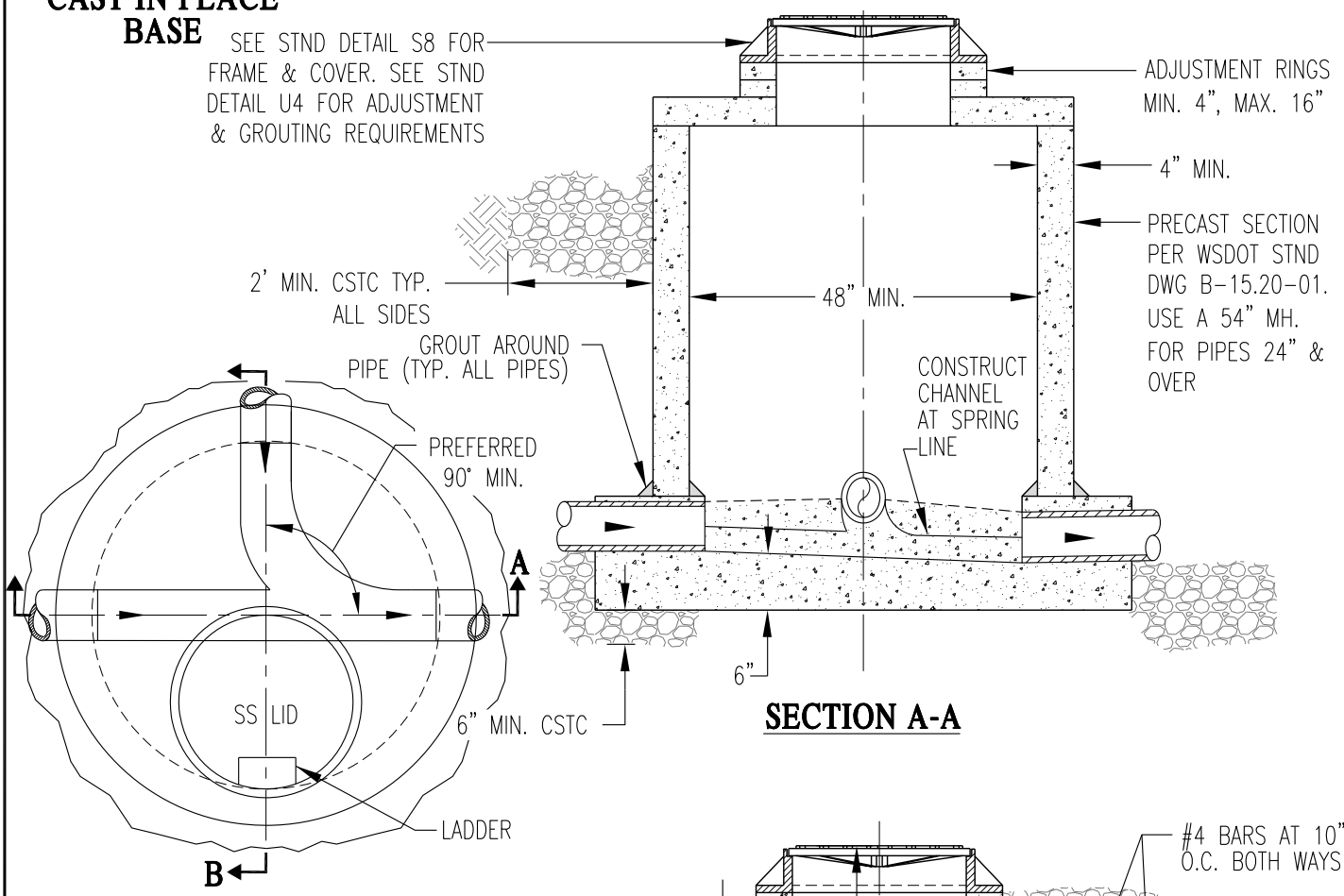

SECTION A-A

PLAN

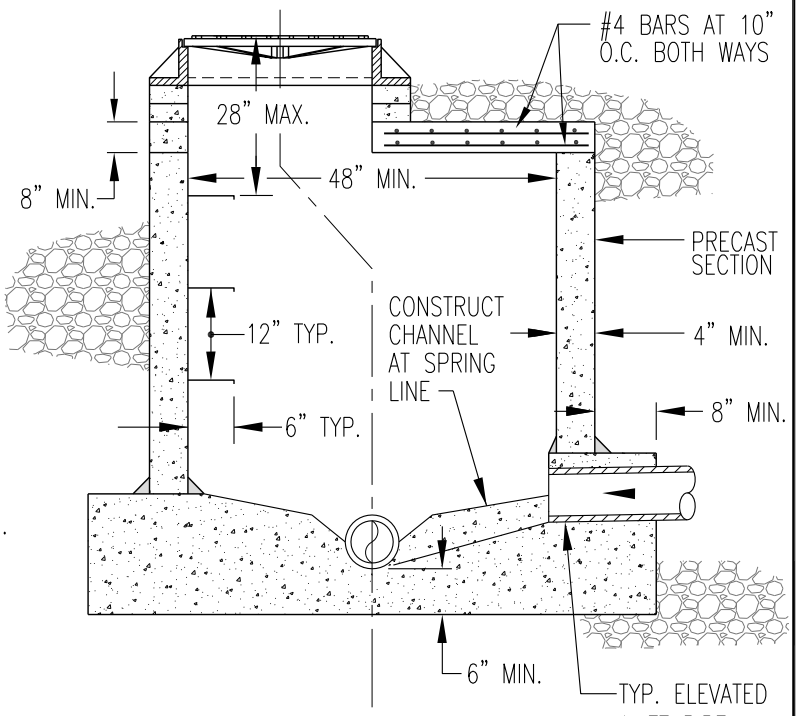

SECTION B-B

NOTES:

1. FOR NEW MAINLINE PIPES: PROVIDE A MINIMUM 0.10 FOOT IN-OUT DROP FOR STRAIGHT RUNS AND 0.20 FOOT IN-OUT DROP FOR ANGLE RUNS. PIPES OF DIFFERENT SIZES SHALL ALIGN CROWN TO CROWN.
2. IN GROUNDWATER INSTALLATIONS: ALL MANHOLE JOINTS SHALL BE MADE USING A CONTINUOUS FLEXIBLE RUBBER MANHOLE GASKET JOINT. ALL HOLES, JOINTS, CONNECTIONS SHALL BE SEALED WITH GROUT ON THE OUTSIDE.
3. A STANDARD MANHOLE SHALL BE USED WHEN IT'S DEPTH IS 5.5' OR MORE FROM INVERT TO TOP OF RIM.
4. STEPS SHALL BE PLACED OVER BENCH, NOT OBSTRUCTING ANY CHANNEL. MANHOLE STEPS SHALL CONFORM TO AASHTO M199 AND MEET ALL WISHA REQUIREMENTS. STEPS REQUIRED ON SANITARY SEWER ONLY. IF BENCH LESS THAN 1' IN WIDTH, PLACE LADDER OVER DOWNSTREAM PIPE.
5. CHANNEL INTERSECTIONS SHALL BE SMOOTH AND DIRECTED DOWNSTREAM.

Richland Washington

SHALLOW MANHOLE (W/CAST IN PLACE BASE)

PUBLIC WORKS ENGINEERING	
APPR. BY: PKR	DATE: 04.16
DRAWN BY: LD	DWG: S5
CAD FILE: 2013_S5_04_2016	

PRECAST BASE

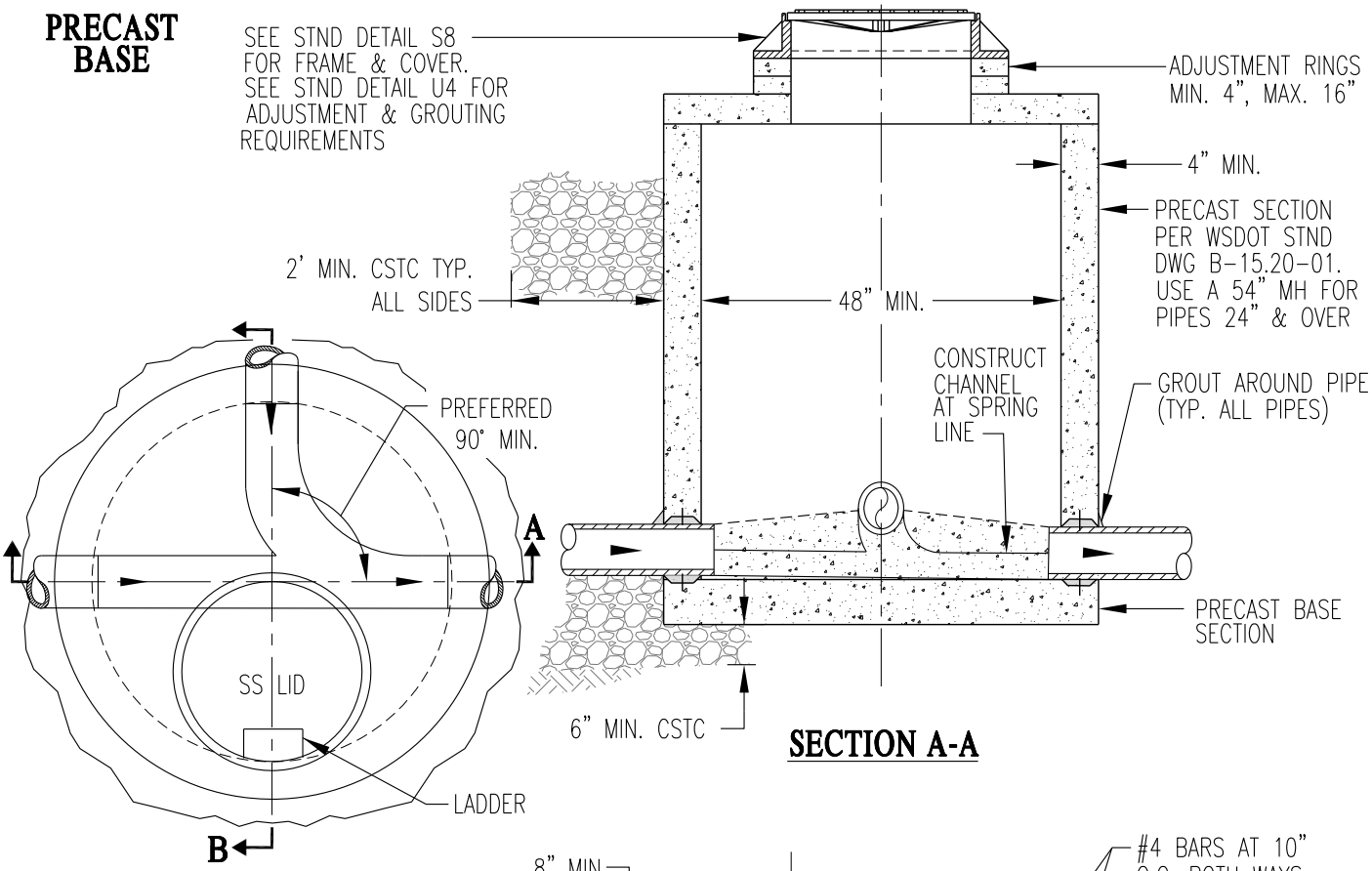

SECTION A-A

PLAN

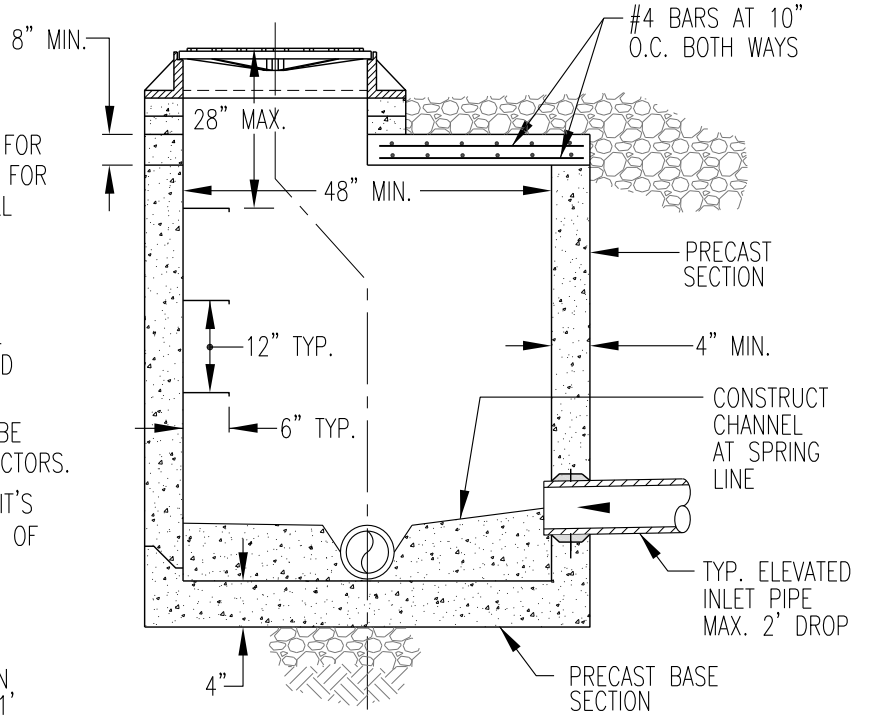

SECTION B-B

NOTES:

1. PROVIDE A MINIMUM 0.10 FOOT IN-OUT DROP FOR STRAIGHT RUNS AND 0.20 FOOT IN-OUT DROP FOR ANGLE RUNS. PIPES OF DIFFERENT SIZES SHALL ALIGN CROWN TO CROWN.
2. IN GROUNDWATER INSTALLATIONS: ALL MANHOLE JOINTS SHALL BE MADE USING A CONTINUOUS FLEXIBLE RUBBER MANHOLE GASKET JOINT. ALL HOLES, JOINTS, CONNECTIONS SHALL BE SEALED WITH GROUT ON THE OUTSIDE.
3. ALL NEW PRECAST MANHOLE SECTIONS SHALL BE PROVIDED WITH CAST-IN FLEXIBLE PIPE CONNECTORS.
4. A STANDARD MANHOLE SHALL BE USED WHEN IT'S DEPTH IS 5.5' OR MORE FROM INVERT TO TOP OF RIM.
5. STEPS SHALL BE PLACED OVER BENCH, NOT OBSTRUCTING ANY CHANNEL. MANHOLE STEPS SHALL CONFORM TO AASHTO M199 AND MEET ALL WISHA REQUIREMENTS. STEPS REQUIRED ON SANITARY SEWER ONLY. IF BENCH LESS THAN 1' IN WIDTH, PLACE LADDER OVER DOWNSTREAM PIPE.
6. CHANNEL INTERSECTIONS SHALL BE SMOOTH AND DIRECTED DOWNSTREAM.

Richland Washington

SHALLOW MANHOLE (W/PRECAST BASE)

PUBLIC WORKS ENGINEERING	
APPR. BY: PKR	DATE: 07.17
DRAWN BY: LD	DWG: S6
CAD FILE: 2013_S6_07_2017	

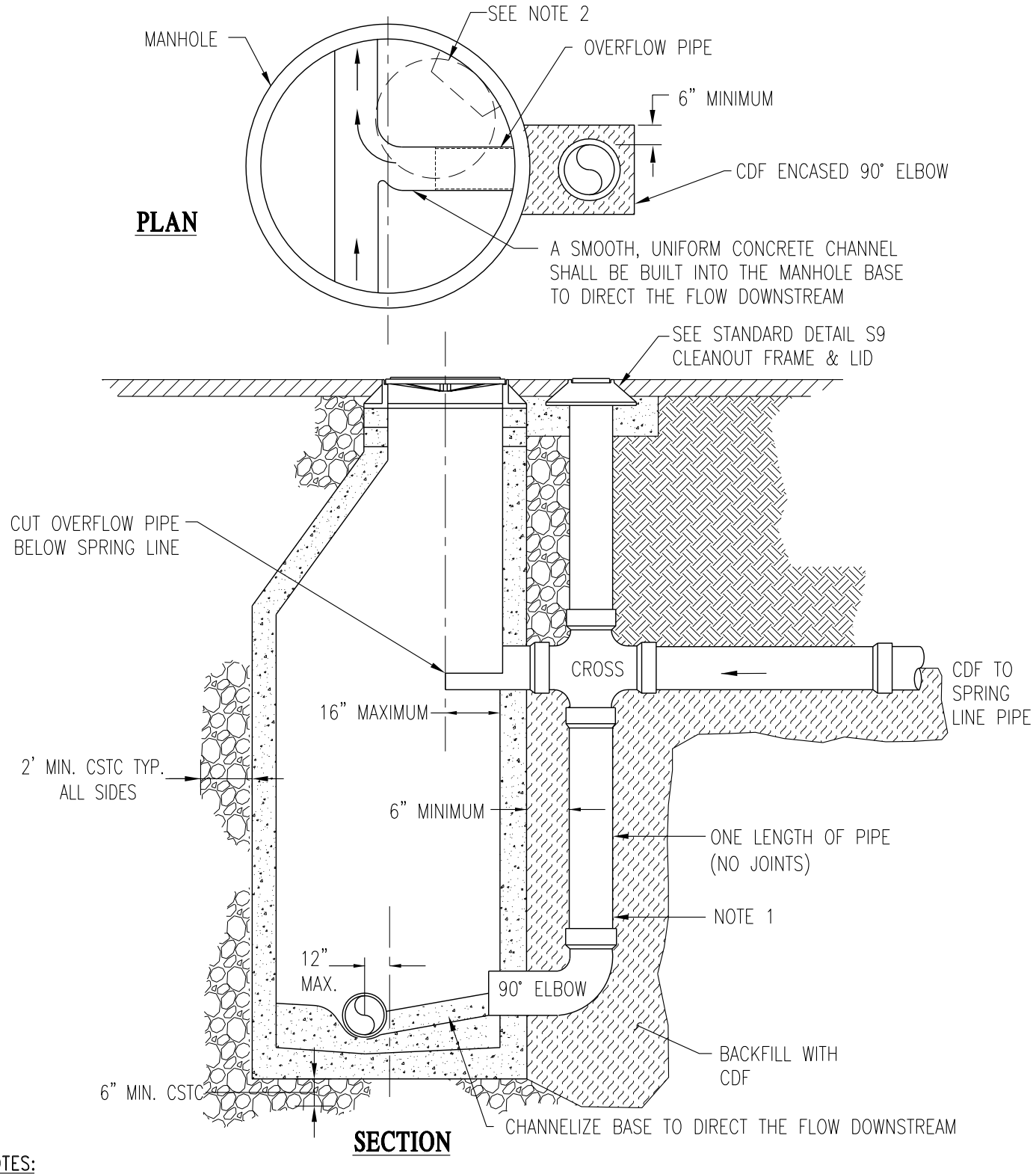

NOTES:

1. DROP CONNECTION PIPE DIAMETER AND FITTINGS SHALL BE EQUAL TO OR GREATER THAN THE DIAMETER OF THE SEWER. DROP CONNECTION PIPE SHALL BE ASTM F679-SDR26(PS115).
2. ROTATE FRAME, COVER, CONE AND LADDER SO THAT IS LOCATED 45° DOWNSTREAM FROM THE DROP CONNECTION.
3. OFFSET MAINLINE (NON-DROP CONNECTION) PIPE IN MANHOLE BY UP TO 12" FROM CENTER LINE.

Richland Washington

SEWER OUTSIDE DROP CONNECTION IN NEW MANHOLES

PUBLIC WORKS ENGINEERING	
APPR. BY: PKR	DATE: 05.14
DRAWN BY: LD	DWG: S6A
CAD FILE: 2014_S6A_05_2014	

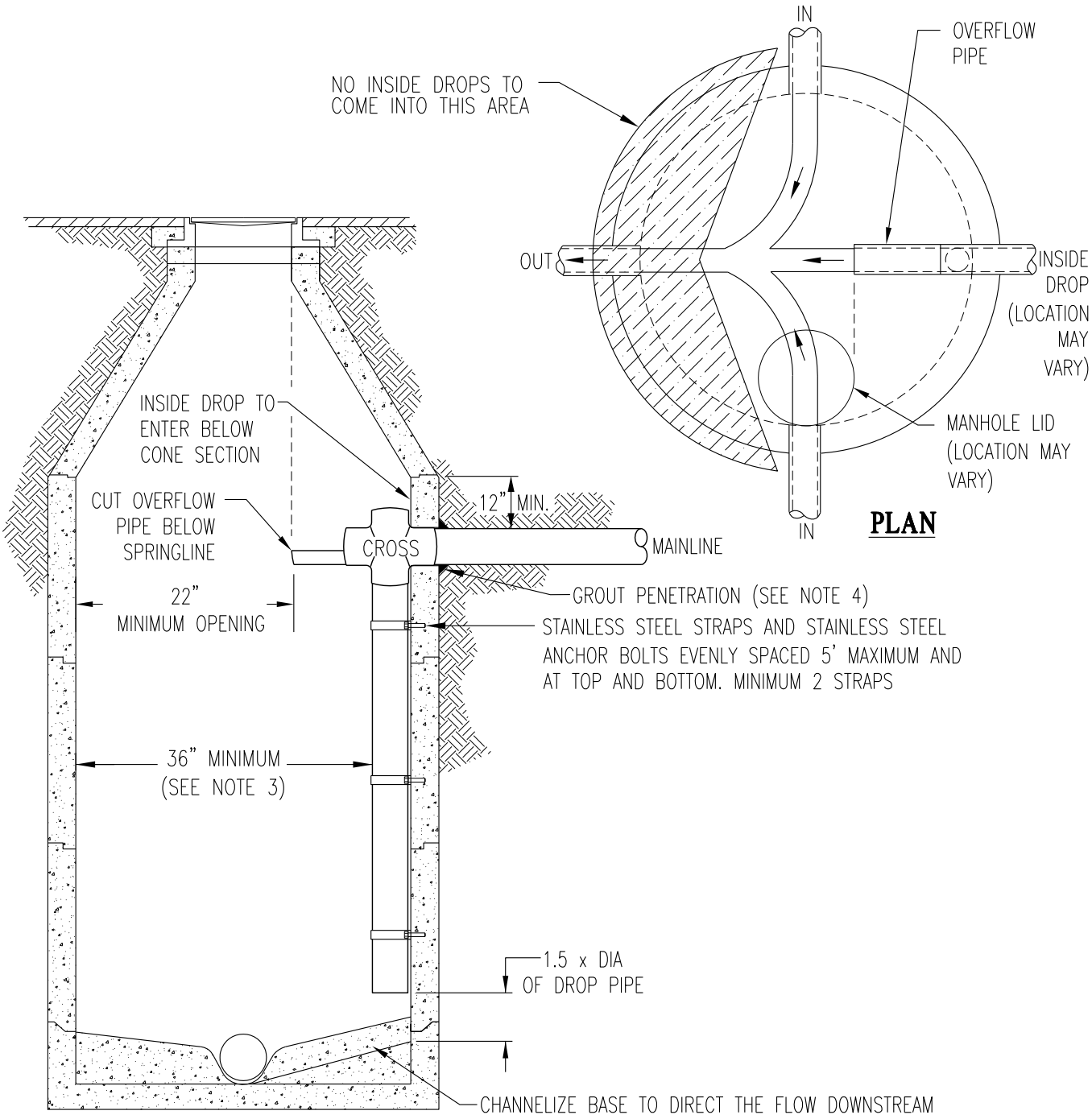

NOTES:

1. DROP CONNECTION PIPE DIAMETER AND FITTINGS SHALL BE EQUAL TO OR GREATER THAN THE DIAMETER OF THE SEWER SERVICE.
2. THE LENGTH OF THE OVERFLOW PIPE VARIES (DEPENDING ON THE MANHOLE LID LOCATION) TO ALLOW ACCESS FROM THE MANHOLE LID.
3. SPECIAL PERMISSION FROM CITY ENGINEER FOR INSTALLATIONS RESULTING IN LESS THAN 36" CLEARANCE.
4. THE ENTRANCE HOLE SHALL BE CORE DRILLED TO A DIAMETER LARGE ENOUGH THAT THE LEG OF THE CROSS WILL FIT THROUGH THE MANHOLE WALL AND SHALL BE GROUTED INSIDE AND OUT.
5. CHANNELIZE BASE TO DIRECT THE FLOW DOWNSTREAM FROM THE DROP PIPE TO THE EXISTING CHANNEL.

Richland Washington

DROP CONNECTION INSIDE SEWER ON EXISTING MANHOLES

PUBLIC WORKS ENGINEERING	
APPR. BY: PKR	DATE: 01.15
DRAWN BY: LD	DWG: S7
CAD FILE: 2013_S7_01_2015	

FRAME
NOT TO SCALE

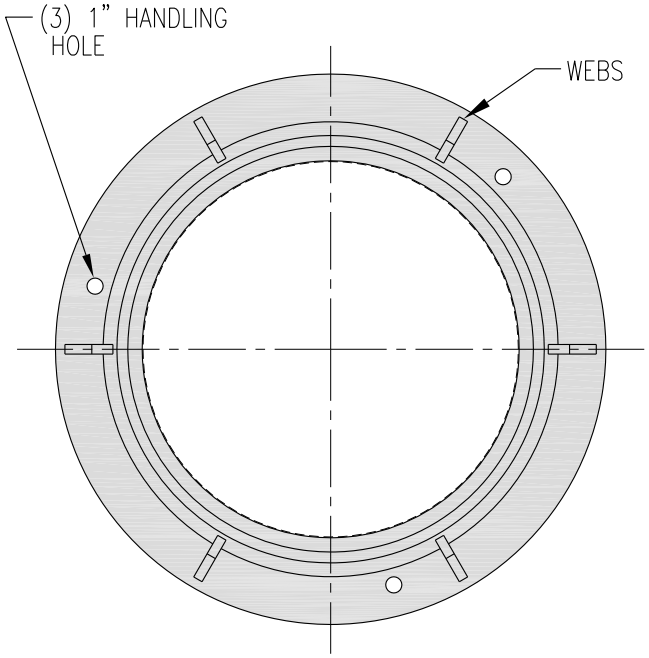

PLAN VIEW

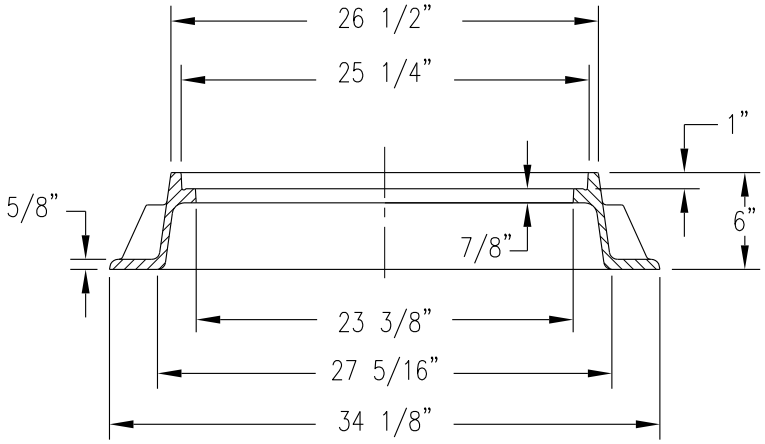

SECTION VIEW

COVER
NOT TO SCALE

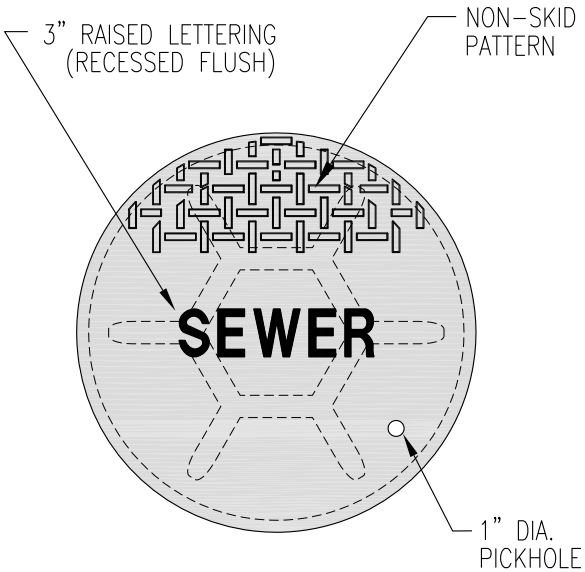

PLAN VIEW

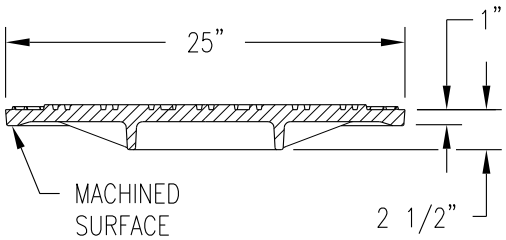

SECTION VIEW

NOTES:

1. COVER – PER MATERIAL LIST
   FRAME – PER MATERIAL LIST
2. MACHINE COVER SEAT & COVER FACE.
3. LOADING – MINIMUM AASHTO H20
4. MANHOLE COVERS TO BE LETTERED AS "WATER," "SEWER," OR "DRAIN" AS REQUIRED BY TYPE OF APPLICATION.

Richland Washington

MANHOLE FRAME AND COVER

PUBLIC WORKS ENGINEERING	
APPR. BY: PKR	DATE: 03.2018
DRAWN BY: EY	DWG: S8
CAD FILE: 2012_S8_03_2018	

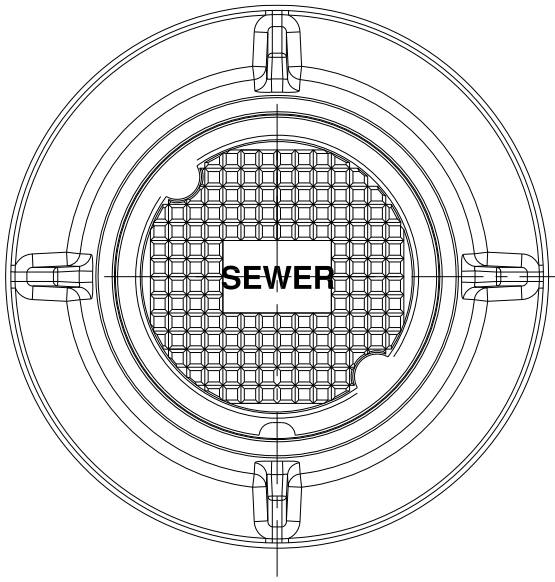

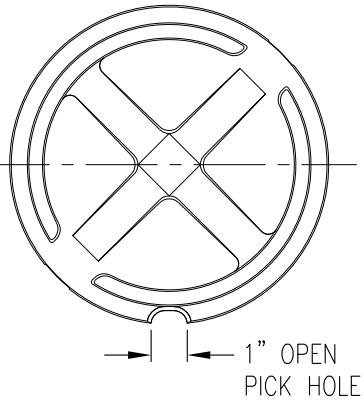

COVER -BOTTOM

COVER - SECTION

DETAIL - SECTION (8")

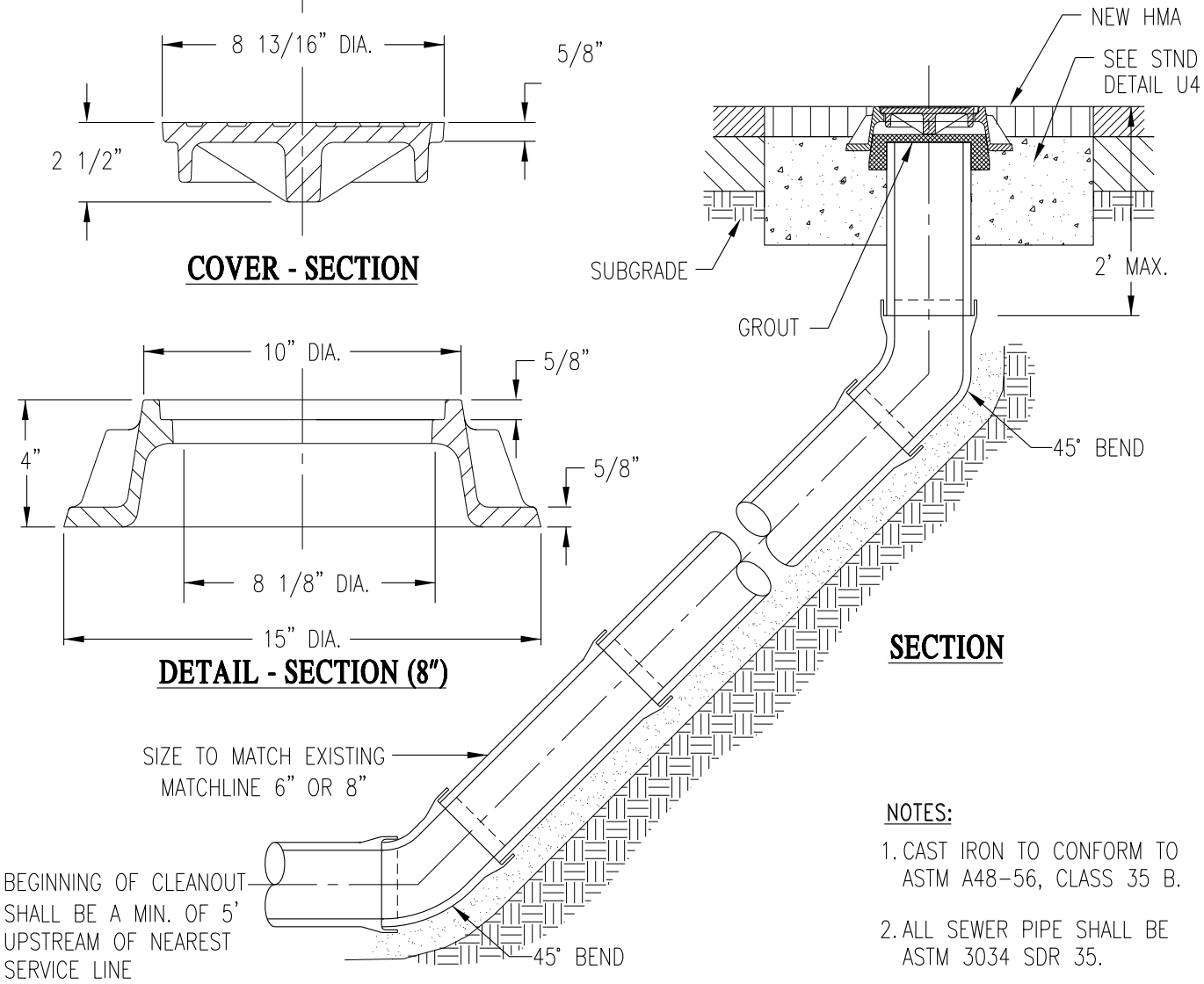

SECTION

NOTES:

1. CAST IRON TO CONFORM TO ASTM A48-56, CLASS 35 B.
2. ALL SEWER PIPE SHALL BE ASTM 3034 SDR 35.

Richland Washington

6" & 8" CLEANOUT ASSEMBLY

PUBLIC WORKS ENGINEERING	
APPR. BY: PKR	DATE: 02.2012
DRAWN BY: JKS	DWG: S9
CAD FILE: 2012_S9_02_2012	

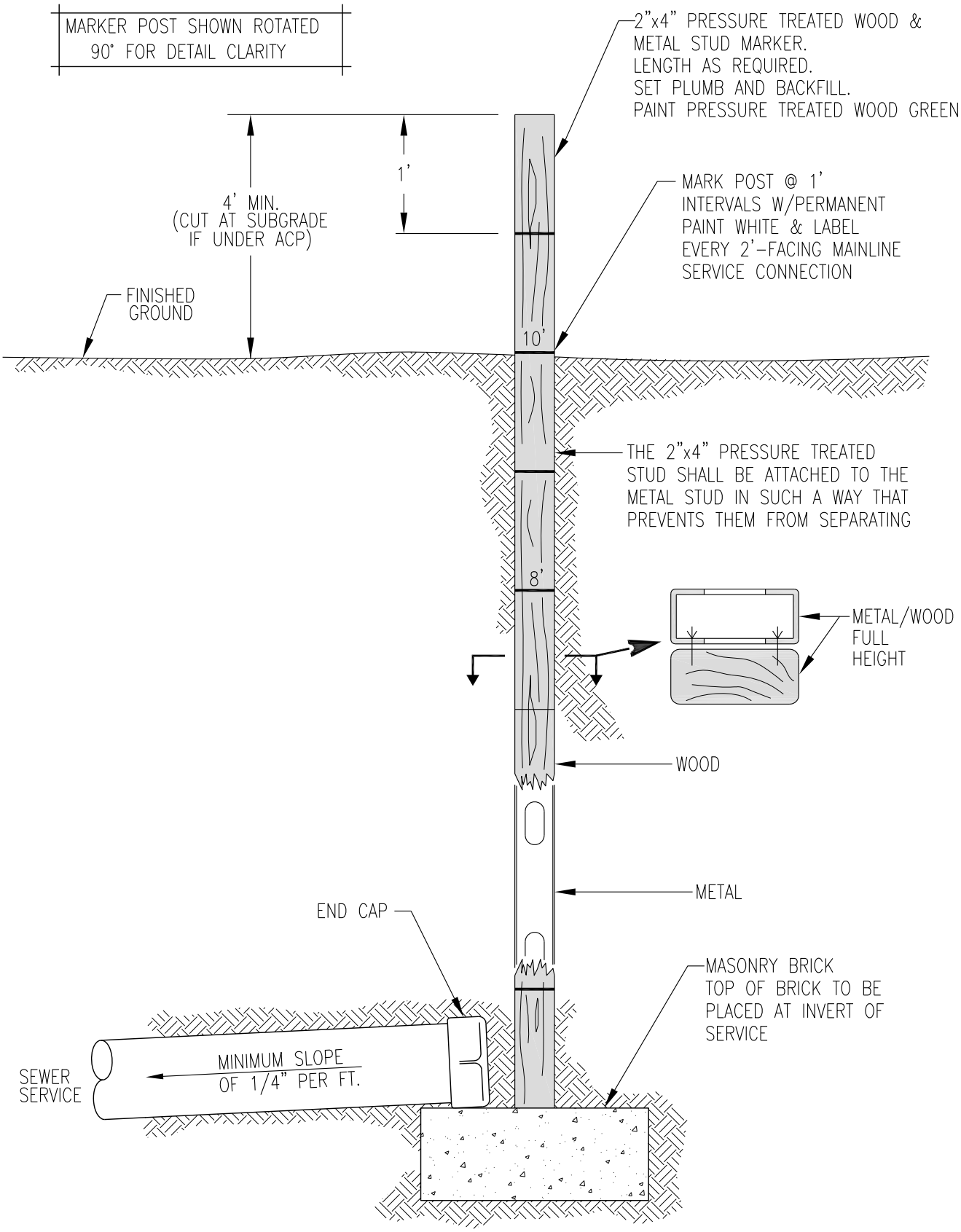

Richland Washington

SEWER MARKER POST

PUBLIC WORKS ENGINEERING	
APPR. BY: PKR	DATE: 02.2012
DRAWN BY: JKS	DWG: S10
CAD FILE: 2012_S10_02_2012	

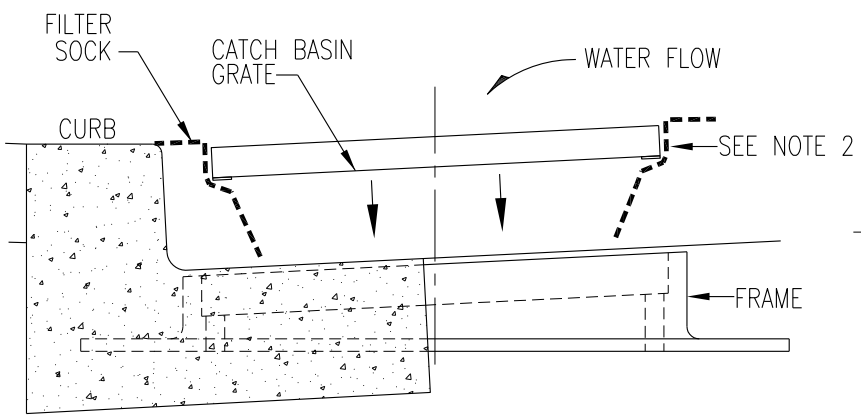

FILTER SOCK DETAIL

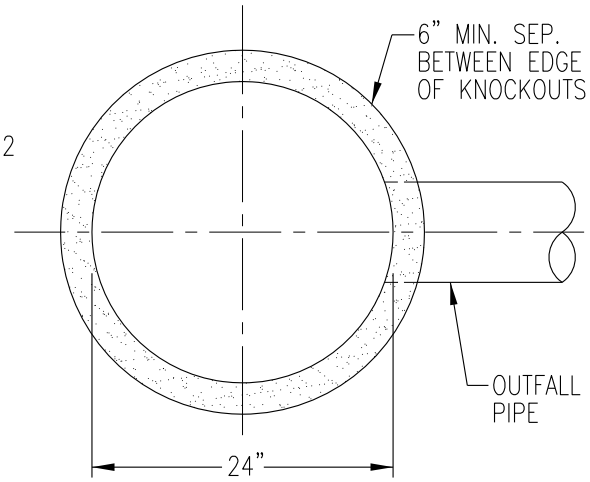

SECTION A-A

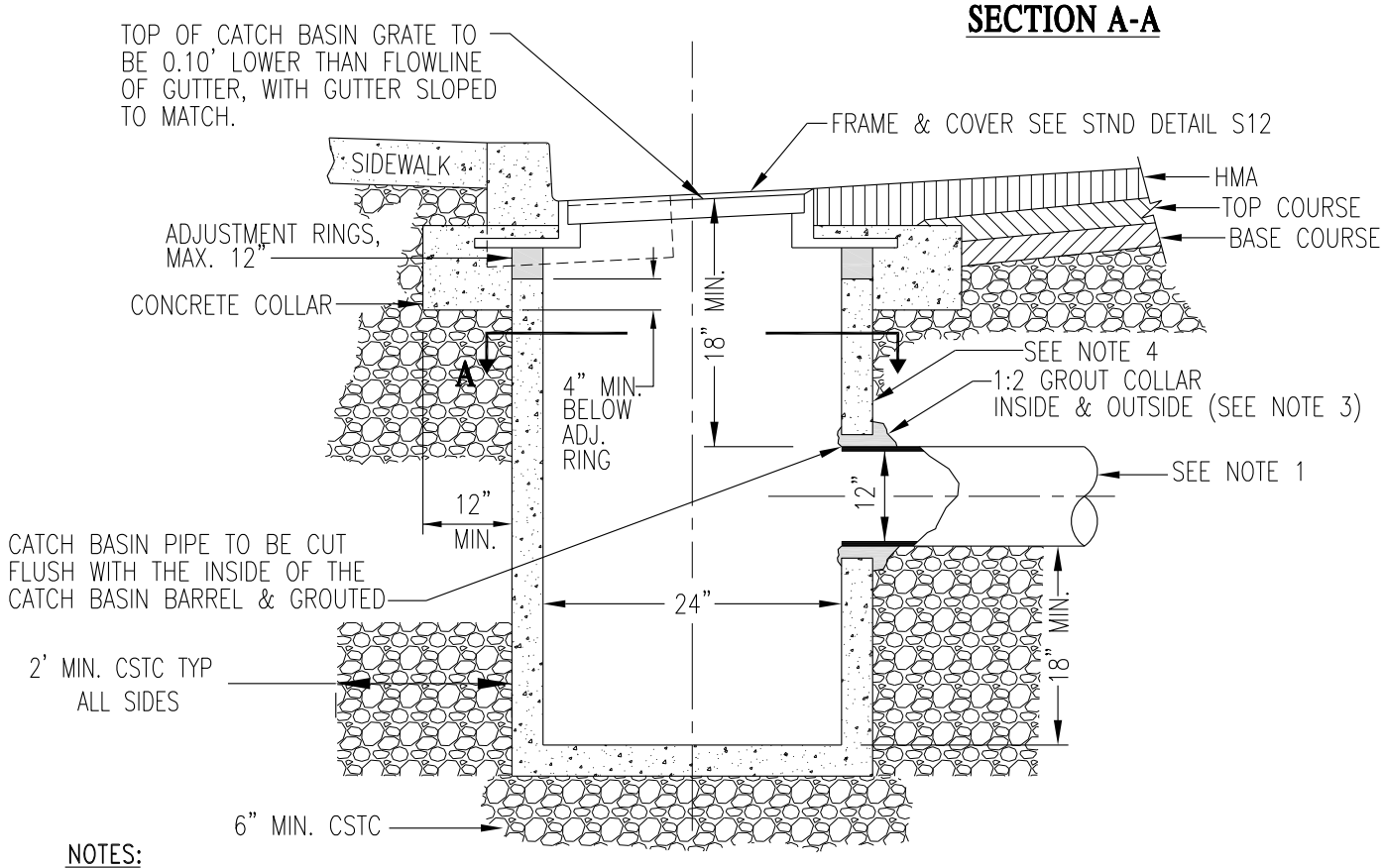

NOTES:

1. C900 PIPE TO BE USED WHEN PIPE COVER IS LESS THAN 18". MAXIMUM NUMBER AND SIZE OF PIPE CONNECTING TO CATCH BASIN SHALL NOT EXCEED 3-12" PIPES.
2. FILTER SOCK TO BE INSTALLED OVER TOP OF CATCH BASIN GRATE PER DETAIL. REMOVE ONLY WHEN DIRECTED BY CITY ENGINEER.
3. 1:2 GROUT BETWEEN CATCH BASIN RING AND CONCRETE TILE, BOTH INSIDE, OUTSIDE AND INSTALL A 12" CONCRETE COLLAR A MINIMUM 4" BELOW ADJUSTMENT RINGS. ADJUSTMENTS 2" AND GREATER TO BE MADE WITH PRECAST CONCRETE RINGS.
4. WIRE REINFORCED PRECAST CATCH BASIN SHALL BE REQUIRED WHEN 3-12" PIPES ARE TO BE CONNECTED.
5. A STORM DRAIN CATCH BASIN MANHOLE SHALL BE USED WHEN ITS DEPTH IS 4.5' OR MORE FROM INVERT TO TOP OF RIM, AND OR MORE THAN 3-12" PIPES ARE CONNECTED.

Richland Washington

TYPE 1 STORM DRAIN CATCH BASIN

PUBLIC WORKS ENGINEERING	
APPR. BY: PKR	DATE: 03.16
DRAWN BY: JLC	DWG: S11
CAD FILE: 2016_S11_03_2016	

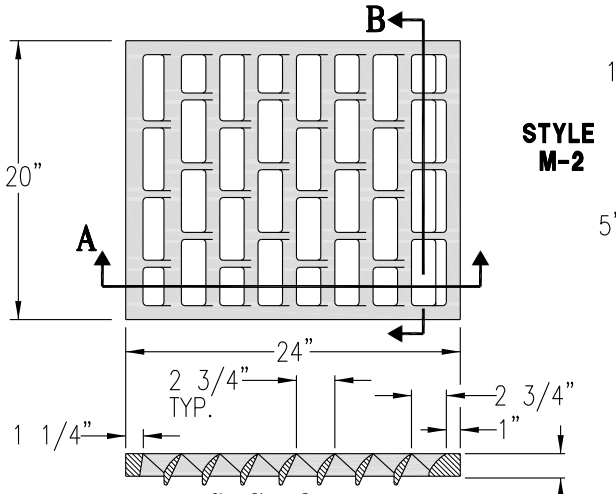

SECTION A-A
1-DIRECTIONAL FLOW

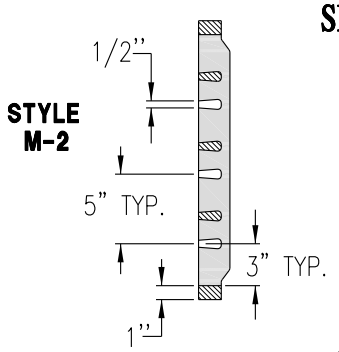

SECTION B-B

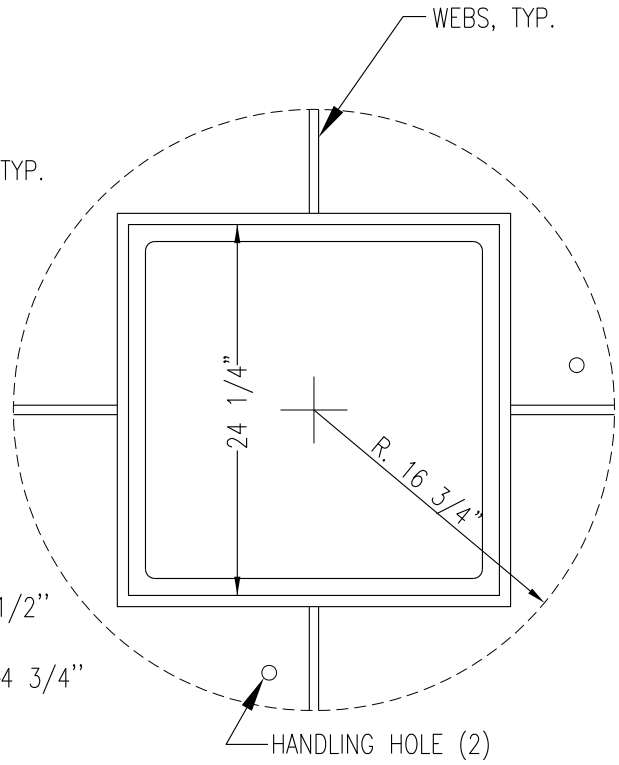

FRAME

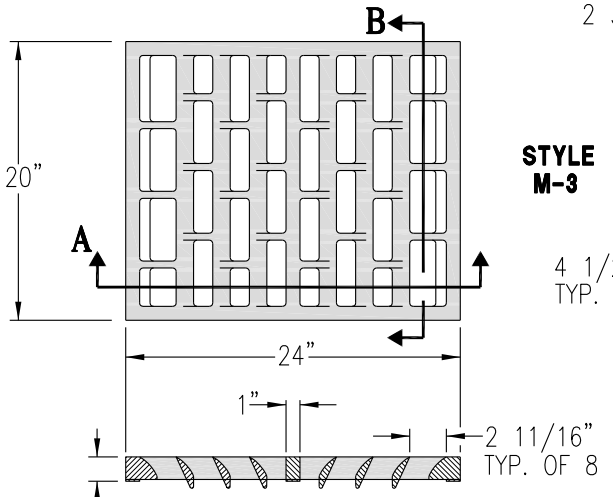

SECTION A-A
2-DIRECTIONAL FLOW

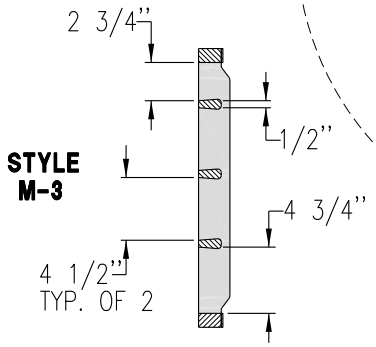

SECTION B-B

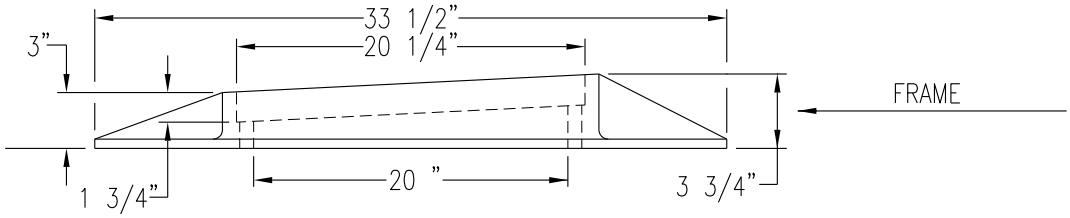

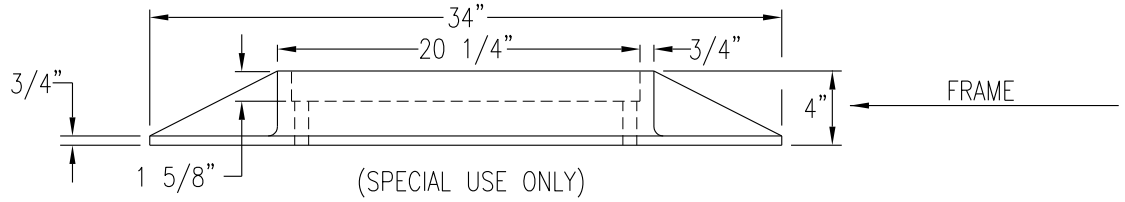

Richland Washington

STORM DRAIN CATCH BASIN FRAME & COVER

PUBLIC WORKS ENGINEERING	
APPR. BY: PKR	DATE: 12.2010
DRAWN BY: LD	DWG: S12
CAD FILE: 2012_S12_12_2010	

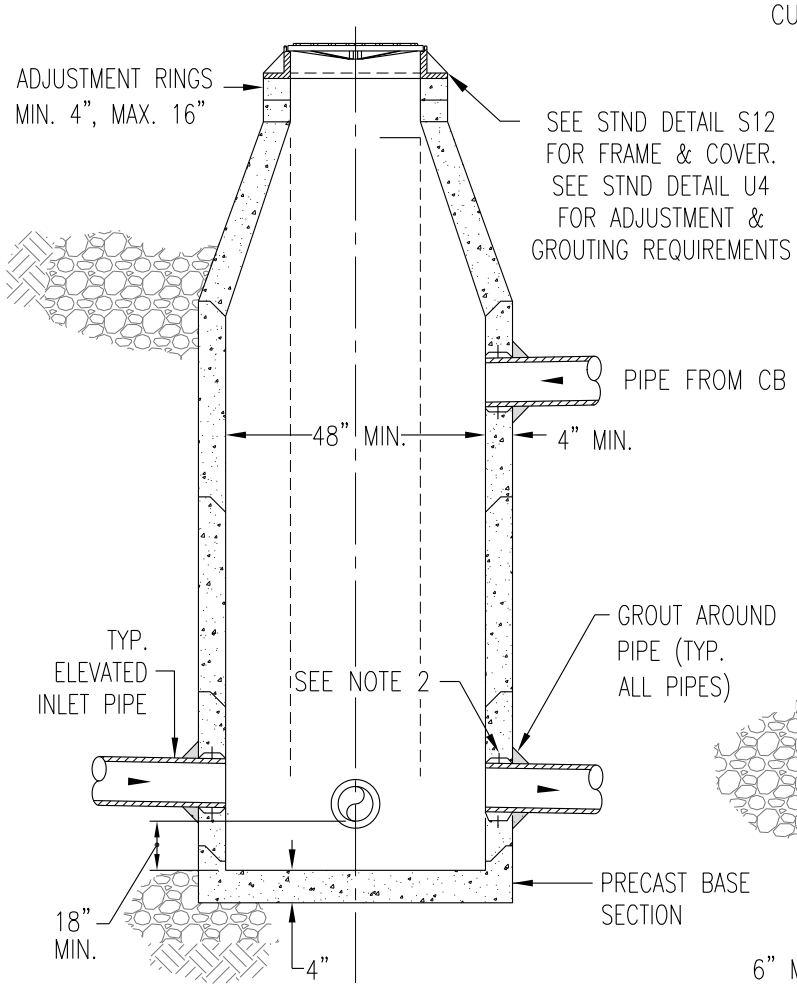

SECTION A-A

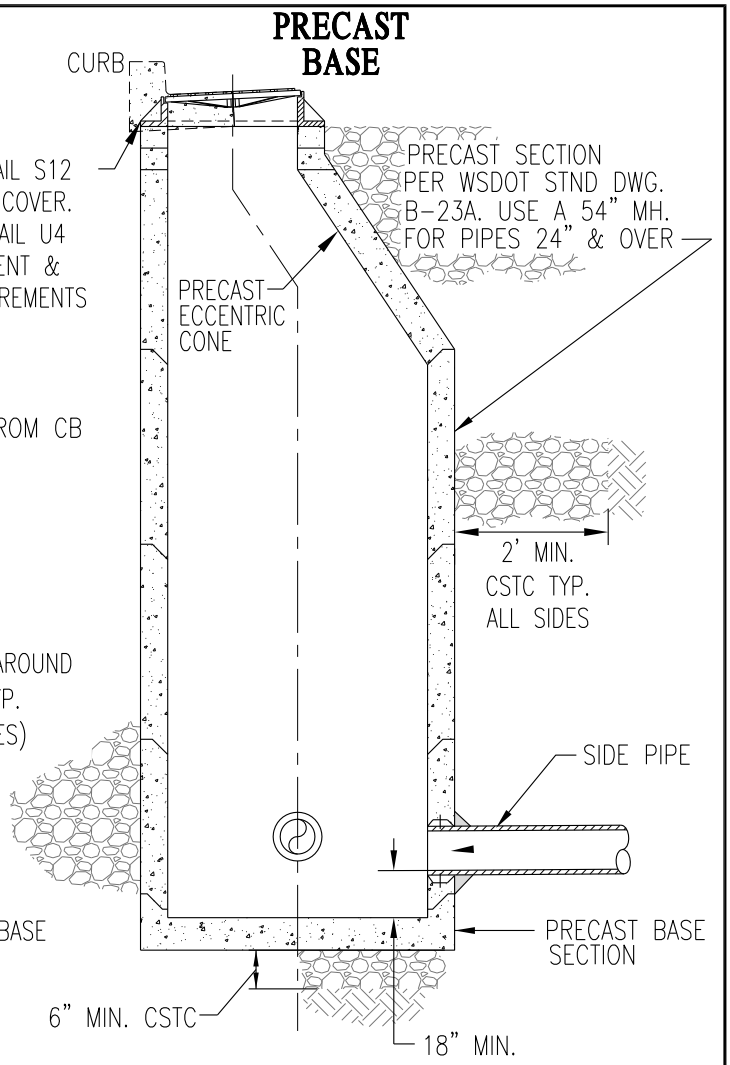

SECTION B-B

NOTES:

1. IN GROUNDWATER INSTALLATIONS: ALL MANHOLE JOINTS SHALL BE MADE USING A CONTINUOUS FLEXIBLE RUBBER MANHOLE GASKET JOINT. ALL HOLES, JOINTS, CONNECTIONS SHALL BE SEALED WITH GROUT ON THE OUTSIDE.
2. ALL NEW PRECAST MANHOLES SHALL BE PROVIDED WITH CAST-IN FLEXIBLE PIPE CONNECTORS. NO PIPE PENETRATIONS ALLOWED INTO PRECAST CONE SECTIONS.
3. A SHALLOW MANHOLE SHALL BE USED WHEN IT'S DEPTH IS 5.5' OR LESS FROM INVERT TO TOP OF RIM.

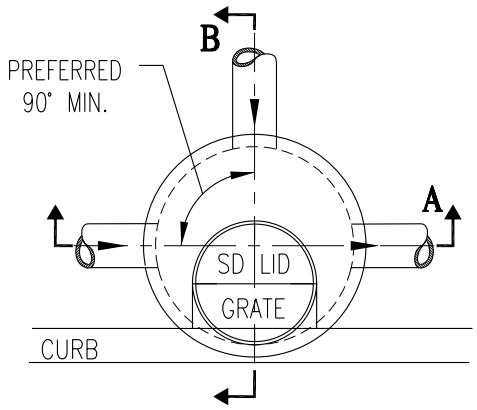

PLAN

Richland Washington

STORM DRAIN CATCH BASIN MANHOLE

PUBLIC WORKS ENGINEERING	
APPR. BY: PKR	DATE: 10.2019
DRAWN BY: EY	DWG: S13
CAD FILE: 2013_S13_03_2018	

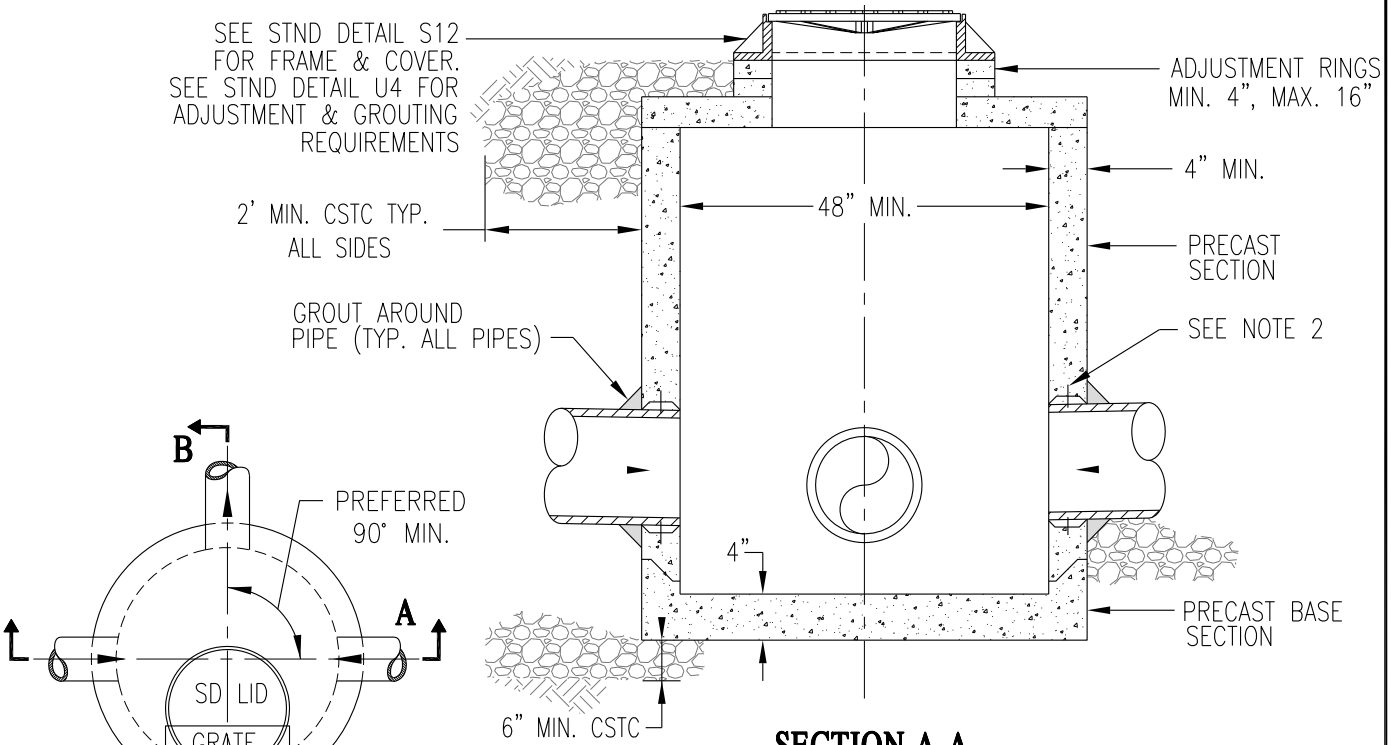

SECTION A-A

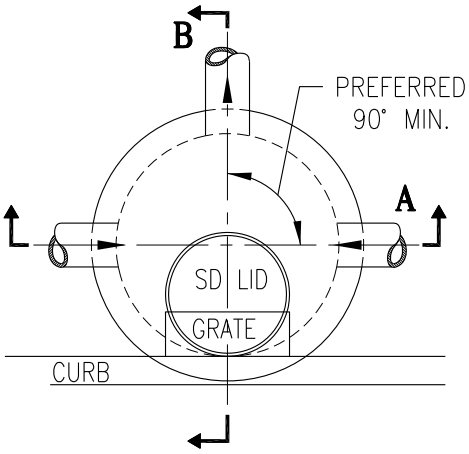

PLAN

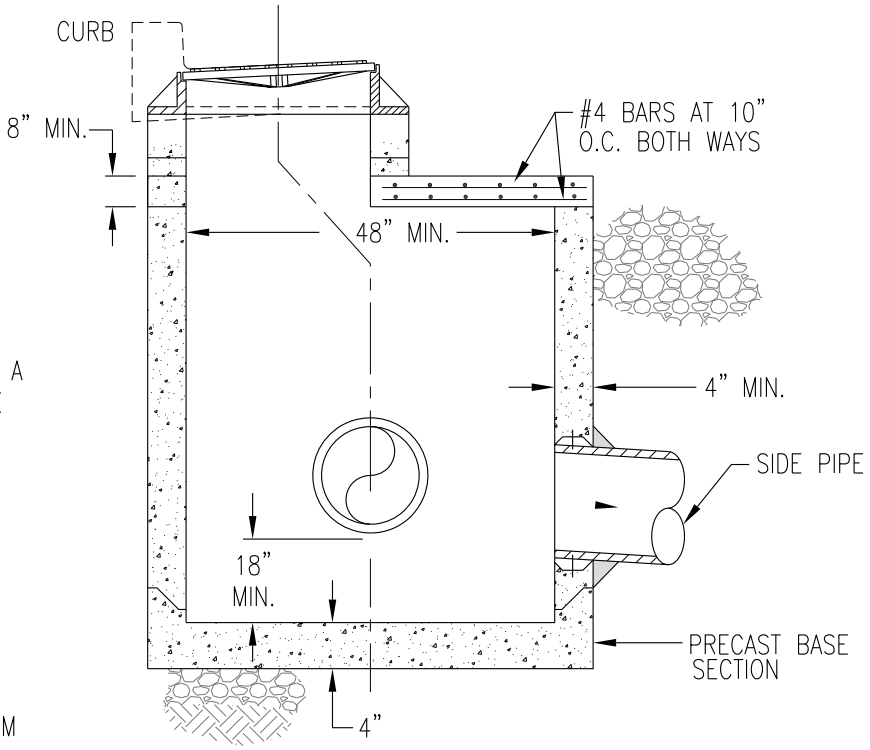

SECTION B-B

NOTES:

1. IN GROUNDWATER INSTALLATIONS: ALL MANHOLE JOINTS SHALL BE MADE USING A CONTINUOUS FLEXIBLE RUBBER MANHOLE GASKET JOINT. ALL HOLES, JOINTS, CONNECTIONS SHALL BE SEALED WITH GROUT ON THE OUTSIDE.
2. ALL NEW PRECAST MANHOLES SHALL BE PROVIDED WITH CAST-IN FLEXIBLE PIPE CONNECTORS.
3. A STANDARD MANHOLE SHALL BE USED WHEN IT'S DEPTH IS 5.5' OR MORE FROM INVERT TO TOP OF RIM.

Richland Washington

SHALLOW STORM DRAIN CATCH BASIN MANHOLE

PUBLIC WORKS ENGINEERING	
APPR. BY: PKR	DATE: 10.2019
DRAWN BY: EY	DWG: S14
CAD FILE: 2013_S14_03_2018	

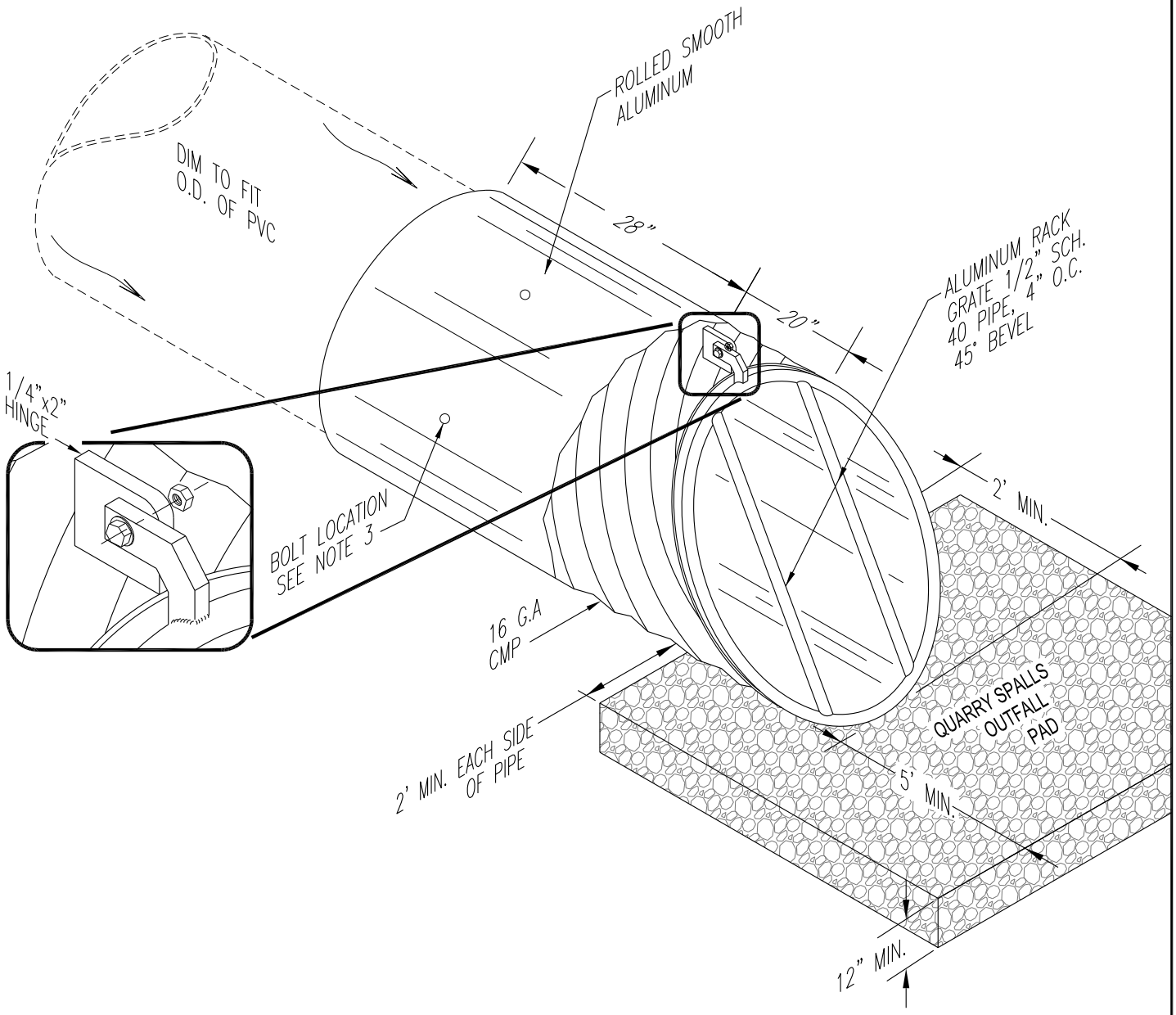

NOTES:

1. CONTRACTOR TO VERIFY ALL DIMENSIONS.
2. ALL PARTS MUST BE ALUMINUM WITH GALVANIZED HARDWARE.
3. SECURE DEBRIS BARRIER SECTION TO PIPE, USING 3 BOLTS INSTALLED AT 3, 9 AND 12 O'CLOCK, WITH HEAD OF BOLT ON THE INSIDE OF THE PIPE.
4. BAR FRAME OUTSIDE RING AND VERTICAL BARS TO BE WELDED INTO ONE RIGID UNIT.
5. WELDED VERTICAL BARS TO OUTSIDE RING.
6. PIPE SIZE, LOCATION AND INVERT PER PLANS.
7. FABRICATED OUTSIDE RING OF FRAME TO FIT OVER TOP OF BEVELED PIPE.

Richland Washington

ALUMINUM TRASH GRATE DETAIL

PUBLIC WORKS ENGINEERING	
APPR. BY: PKR	DATE: 09.13
DRAWN BY: LD	DWG: S15
CAD FILE: 2013_S15_09_2013	

EXAMPLE EROSION CONTROL PLAN

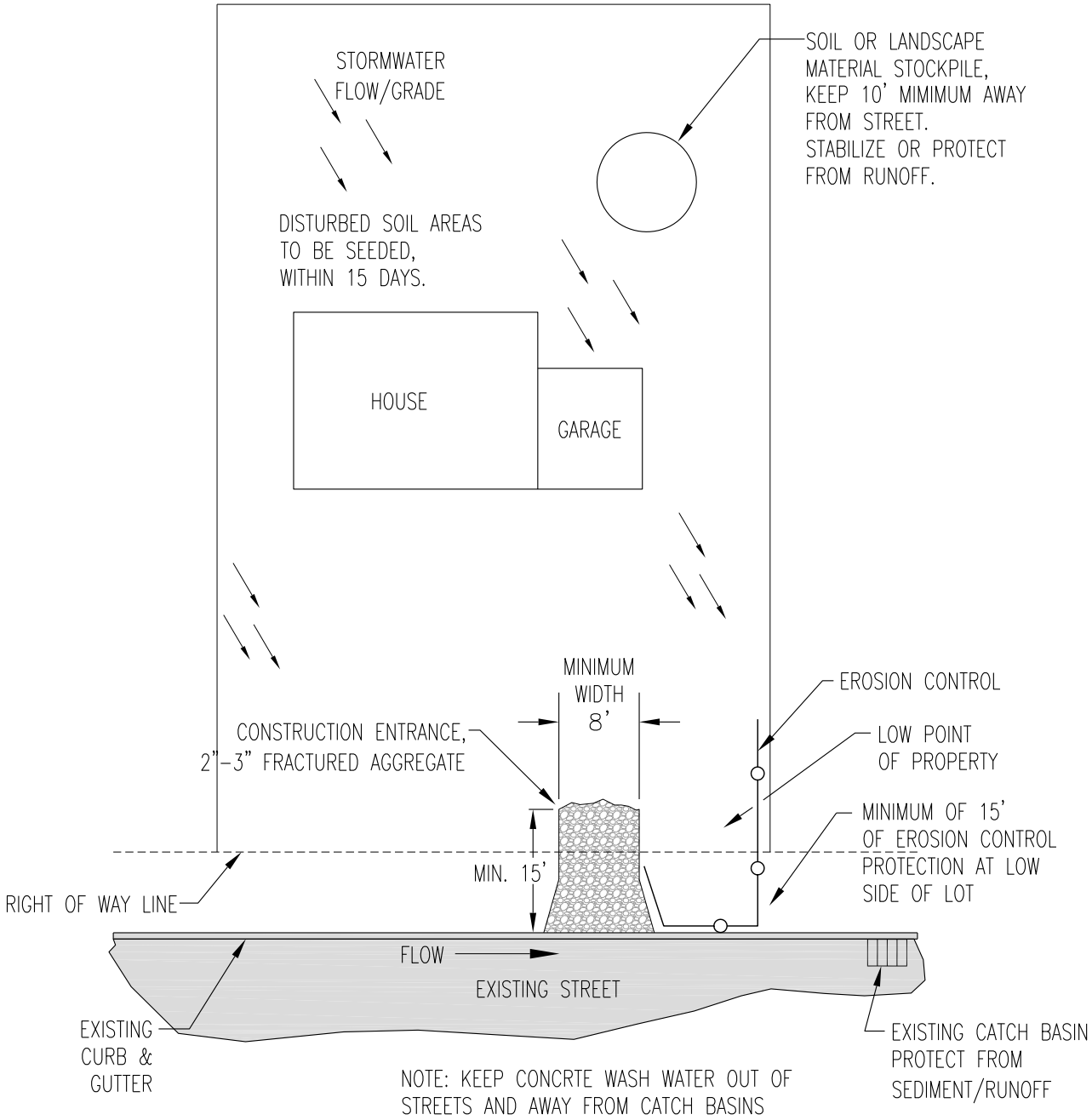

EROSION CONTROL MEASURES

KEEP RUNOFF OUT OF THE STREET WITH ONE OF THE FOLLOWING METHODS:

1. SILT FENCING OR
2. EXCAVATE 5-FEET x 6-INCH DEEP BEHIND CURB AND STABILIZE WITH HYDRO SEED, ROCK OR MULCH. (SEE DETAIL AT RIGHT)

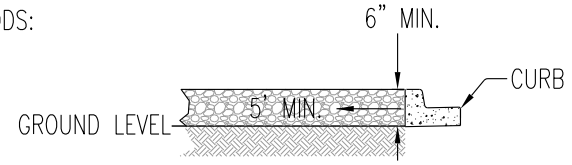

DETAIL

Richland Washington	EROSION CONTROL PLAN CONSTRUCTION BMP'S SHEET 1 of 3	PUBLIC WORKS ENGINEERING
		APPR. BY: PKR — DATE: 05.14
		DRAWN BY: JG — DWG: S16
		CAD FILE: 2014_S16-1_05_2014

SUGGESTED BMP'S FOR RESIDENTIAL CONSTRUCTION SITES

NOTE: PUBLIC WORKS WILL INSPECT THE SITE FOR SOIL/SEDIMENT STABILIZATION.

WARNING! EXTRA MEASURES (Beyond the BMP's) MAY BE NEEDED IF YOUR SITE:

- IS WITHIN 300-FEET OF A STREAM OR STORM DRAIN INLET THAT LEADS TO A STREAM.
- IS STEEPLY GRADED (SLOPES OF 5% OR MORE).
- RECEIVES RUNOFF FROM ADJACENT LAND.
- HAS MORE THAN AN ACRE OF DISTURBED GROUND.

Soil/Landscaping Piles:

1. DO NOT STOCKPILE SOIL OR LANDSCAPING MATERIALS IN THE STREET.
2. LOCATE AWAY FROM ANY DOWNSLOPE STREET, DRIVEWAY, STREAM, WETLAND, DITCH OR DRAINAGE WAY. COVER WITH PLASTIC OR HYDROSEED.
3. TEMPORARY DROUGHT-TOLERANT SEEDING OR TACKIFIER IS RECOMMENDED FOR TOPSOIL PILES.

Storm Drain Inlet Protection:

1. PROTECT THE NEAREST DOWNSTREAM STORM DRAIN INLET IN THE CITY STREET WITH SILT FENCES, SILT FABRIC OR EQUIVALENT MEASURES.
2. INSPECT, REPAIR AND REMOVE SEDIMENT DEPOSITS FROM LOW AREAS AND STREET AFTER EVERY STORM OR RUNOFF EVENT.

Sediment Cleanup:

1. BY THE END OF EACH WORK DAY, SWEEP OR SCRAPE UP SOIL TRACKED ONTO THE ROAD. DO NOT HOSE INTO STORM DRAIN SYSTEM.
2. BY THE END OF THE NEXT WORK DAY AFTER A STORM, CLEAN UP SOIL WASHED OFF-SITE.
3. REMEMBER TO CONTROL YOUR DUST, BUT TOO MUCH WATERING CAN LEAD TO RUNOFF OF SEDIMENT-LADEN WATER INTO THE STREET OR NEIGHBORING LOT.

Vegetation/Revegetation:

1. WHEREVER POSSIBLE, PRESERVE EXISTING TREES, SHRUBS, GRASSES AND OTHER VEGETATION.
2. SEED, SOD OR MULCH BARE SOIL AS SOON AS POSSIBLE. VEGETATION IS THE MOST EFFECTIVE WAY TO CONTROL EROSION.

Stabilized Construction Entrances (See Detail):

1. THE STABILIZED CONSTRUCTION ENTRANCE SHALL BE INSTALLED BEHIND THE CURB AT THE FUTURE DRIVEWAY LOCATION. CALL 942-7500 FOR A CURB-CUT INSPECTION PRIOR TO INSTALLATION. DO NOT PILE SOIL OR ROCK IN THE GUTTER.
2. THE ENTRANCE SHALL BE COMPOSED OF 2-INCH TO 3-INCH FRACTURED AGGREGATE STONE (WITH MINIMAL FINES). LAY THE STONE A MINIMUM OF 6" DEEP, AT LEAST 8-FEET WIDE AND A MINIMUM OF 15-FEET ONTO THE SITE, MEASURED FROM BACK OF CURB, OR THE DISTANCE TO THE FOUNDATION, WHICHEVER IS LESS.

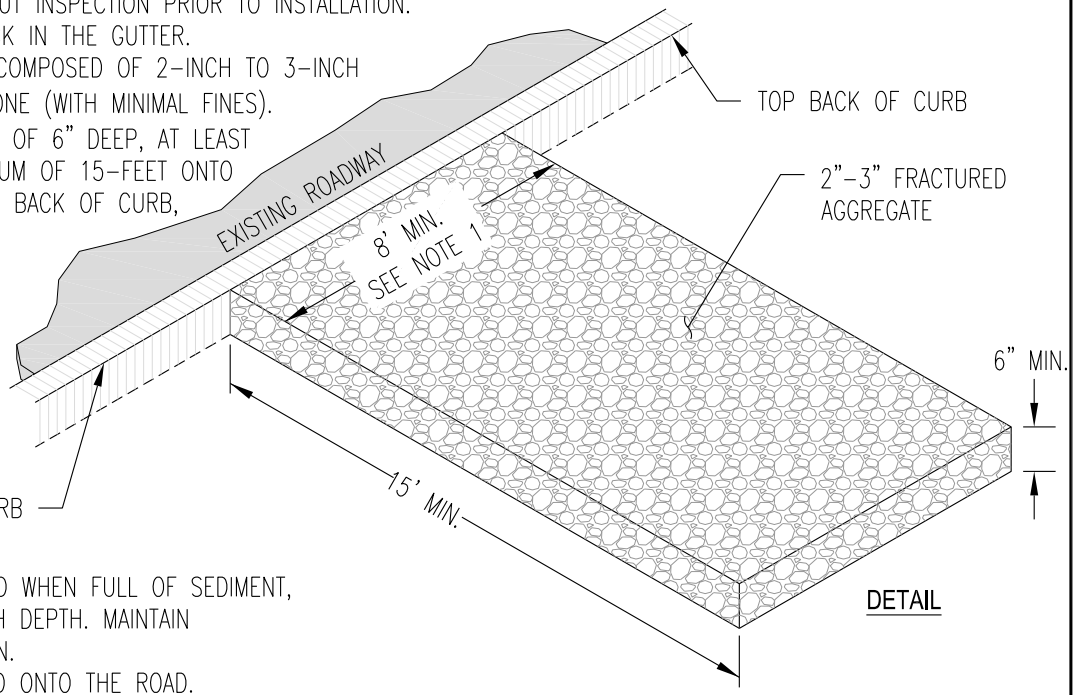

DETAIL

3. REPLACE STONE AS NEEDED WHEN FULL OF SEDIMENT, AND TO MAINTAIN A 6-INCH DEPTH. MAINTAIN THROUGHOUT CONSTRUCTION.
4. PREVENT TRACKING OF MUD ONTO THE ROAD.

Richland Washington

EROSION CONTROL PLAN
CONSTRUCTION BMP'S
SHEET 2 of 3

PUBLIC WORKS ENGINEERING	
APPR. BY: PKR	DATE: 11.15
DRAWN BY: LD	DWG: S16
CAD FILE: 2014_S16-2_11_2015	

Silt Fences :*

1. INSTALL PRIOR TO LAND DISTURBANCE.
2. INSTALL ON DOWNSLOPE SIDES OF SITE, PARALLEL TO CONTOUR OF THE LAND.
3. EXTEND ENDS UPSLOPE ENOUGH TO KEEP PONDING WATER BEHIND FENCE.
4. LEAVE NO GAPS. OVERLAP SECTIONS OF SILT FENCE, OR TWIST ENDS OF SILT FENCE TOGETHER.
5. INSPECT AND REPAIR ONCE A WEEK AND AFTER ANY RAIN/SNOWMELT EVENTS. REMOVE SEDIMENT IF DEPOSITS REACH HALF THE FENCE HEIGHT.
6. MAINTAIN UNTIL LANDSCAPING OR HYDROSEED IS ESTABLISHED.

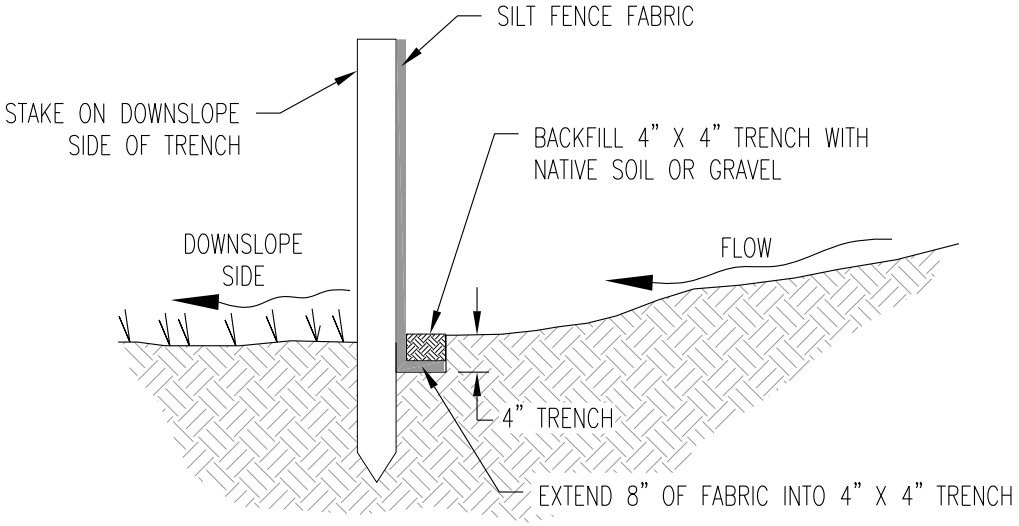

SILT FENCE INSTALLATION CROSS SECTION

*ALTERNATIVELY, IF THE STREET IS ON THE LOW SIDE OF THE LOT, GRADE THE LOT 5' BEHIND THE CURB, THEN STABILIZE WITH 2-INCH TO 3-INCH FRACTURED AGGREGATE (6" DEEP). THIS CAN BE ALLOWED IN LIEU OF SILT FENCE.

Richland Washington	EROSION CONTROL PLAN CONSTRUCTION BMP'S SHEET 3 of 3	PUBLIC WORKS ENGINEERING
		APPR. BY: PKR — DATE: 05.14
		DRAWN BY: LD — DWG: S16
		CAD FILE: 2014_S16-3_05_2014

NOTES:

1. ALL NEW PRECAST MANHOLES SHALL BE PROVIDED WITH CAST-IN FLEXIBLE PIPE CONNECTORS.

2. ALL MANHOLE JOINTS SHALL BE MADE USING A CONTINUOUS FLEXIBLE RUBBER MANHOLE GASKET, OR FULL BED GROUT JOINT.

3. EXTEND ALL PIPE INVERTS SO THEY ARE AT THE VERTICAL EDGE OF THE MANHOLE OPENING. CUT PIPES BELOW SPRING LINE.

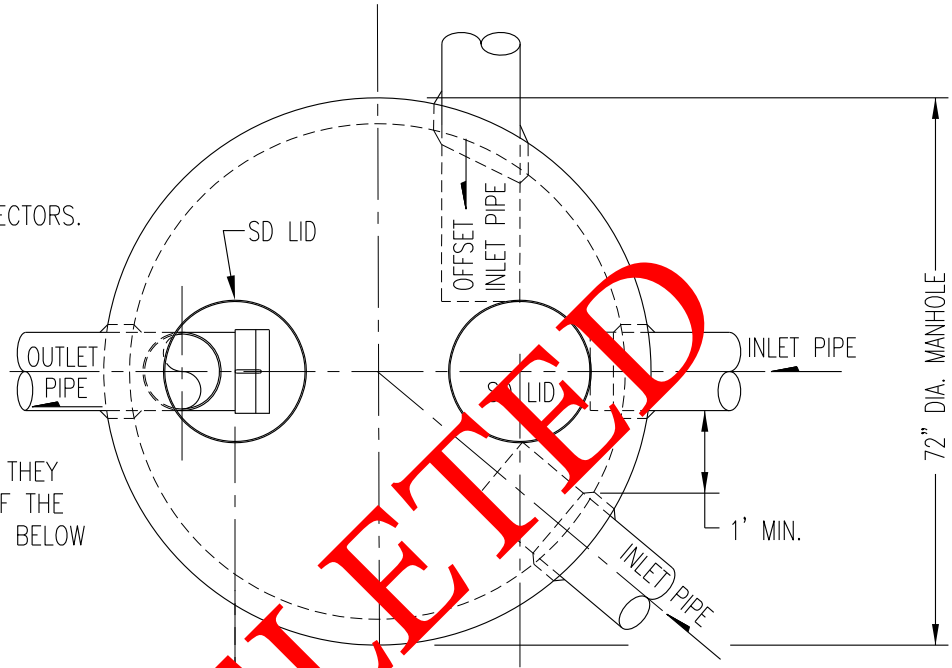

DELETED

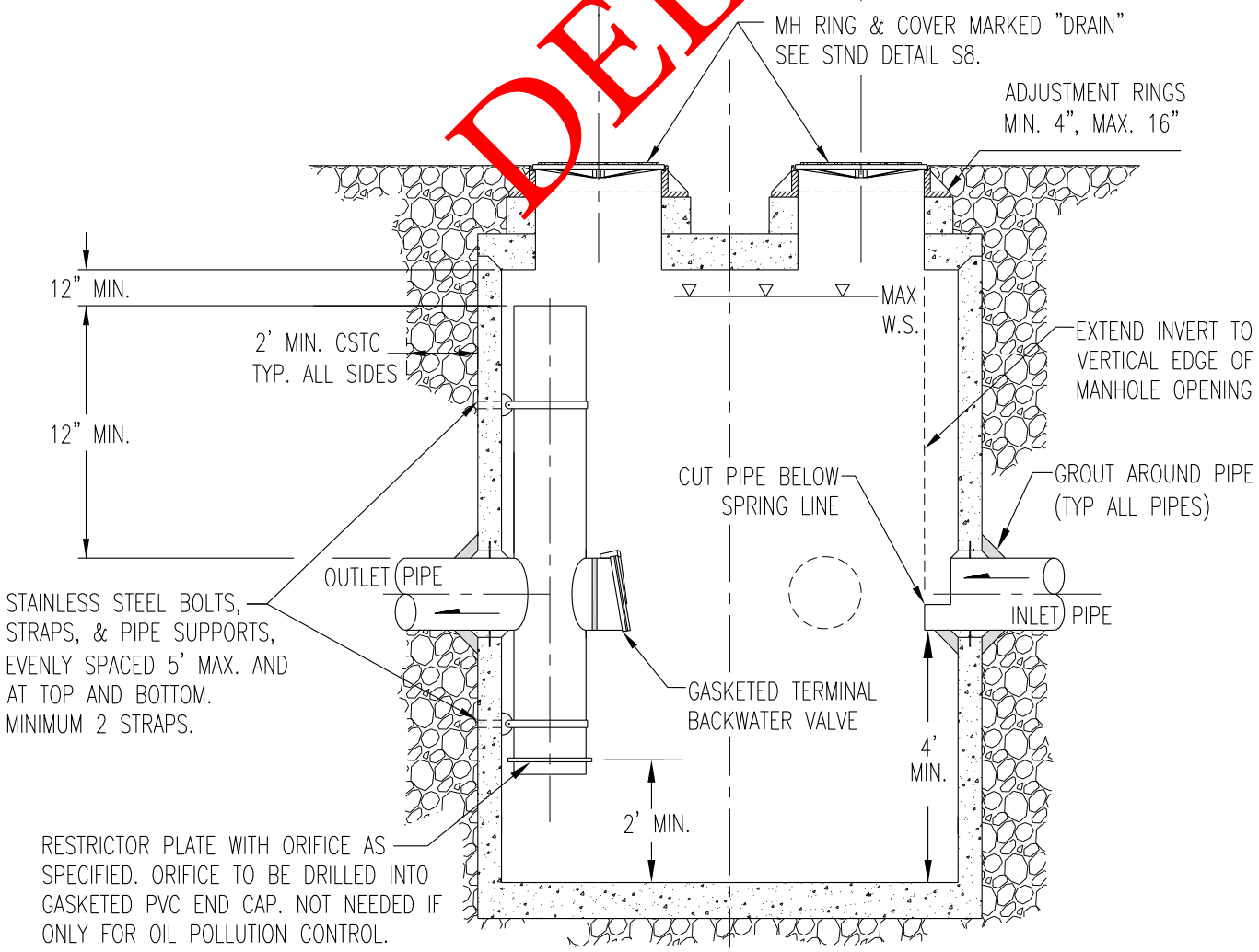

Richland Washington

SPILL CONTROL SEPARATOR

PUBLIC WORKS ENGINEERING	
APPR. BY: PKR	DATE: 07.17
DRAWN BY: LD	DWG: S17
CAD FILE: 2014_S17_07_2017	

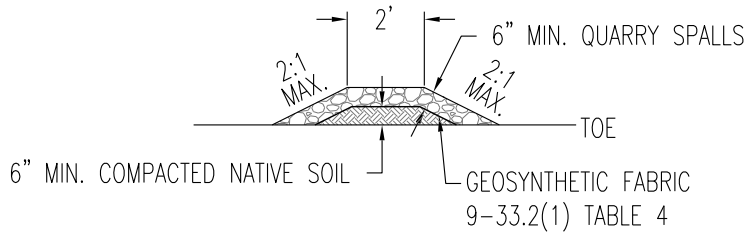

SECTION B-B

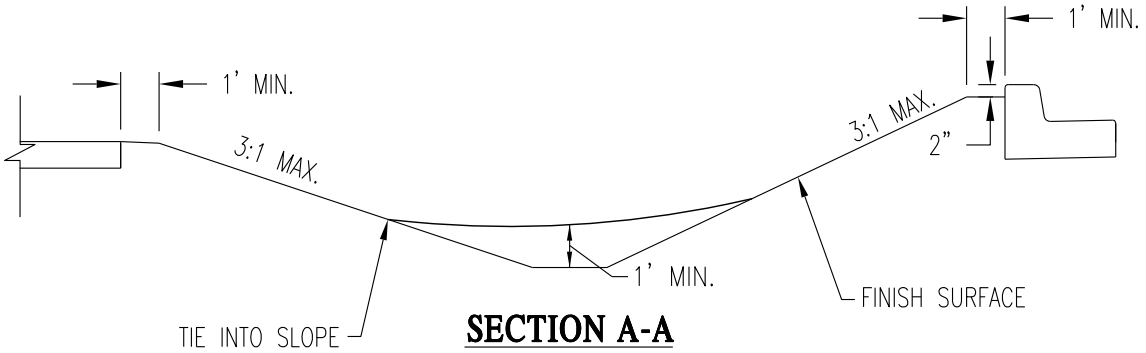

SECTION A-A

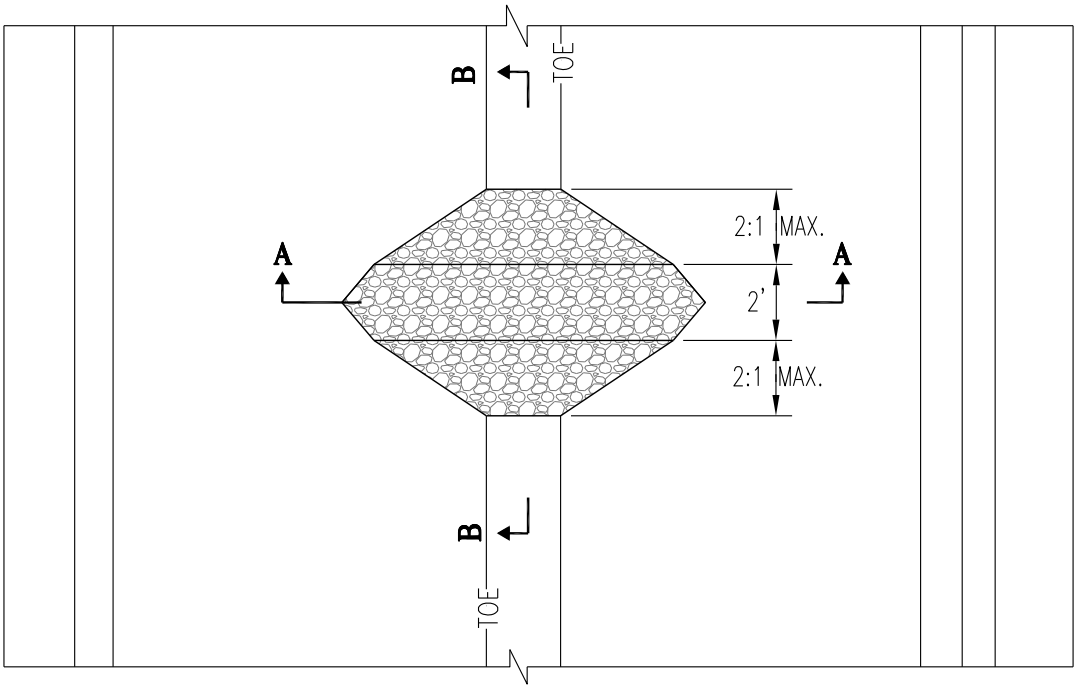

PLAN VIEW

NOT TO SCALE

Richland Washington	ROADSIDE SWALE/ CHECK DAM DETAIL	PUBLIC WORKS ENGINEERING
		APPR. BY: PKR — DATE: 09.13
		DRAWN BY: LD — DWG: S18
		CAD FILE: 2013_S18_09_2013

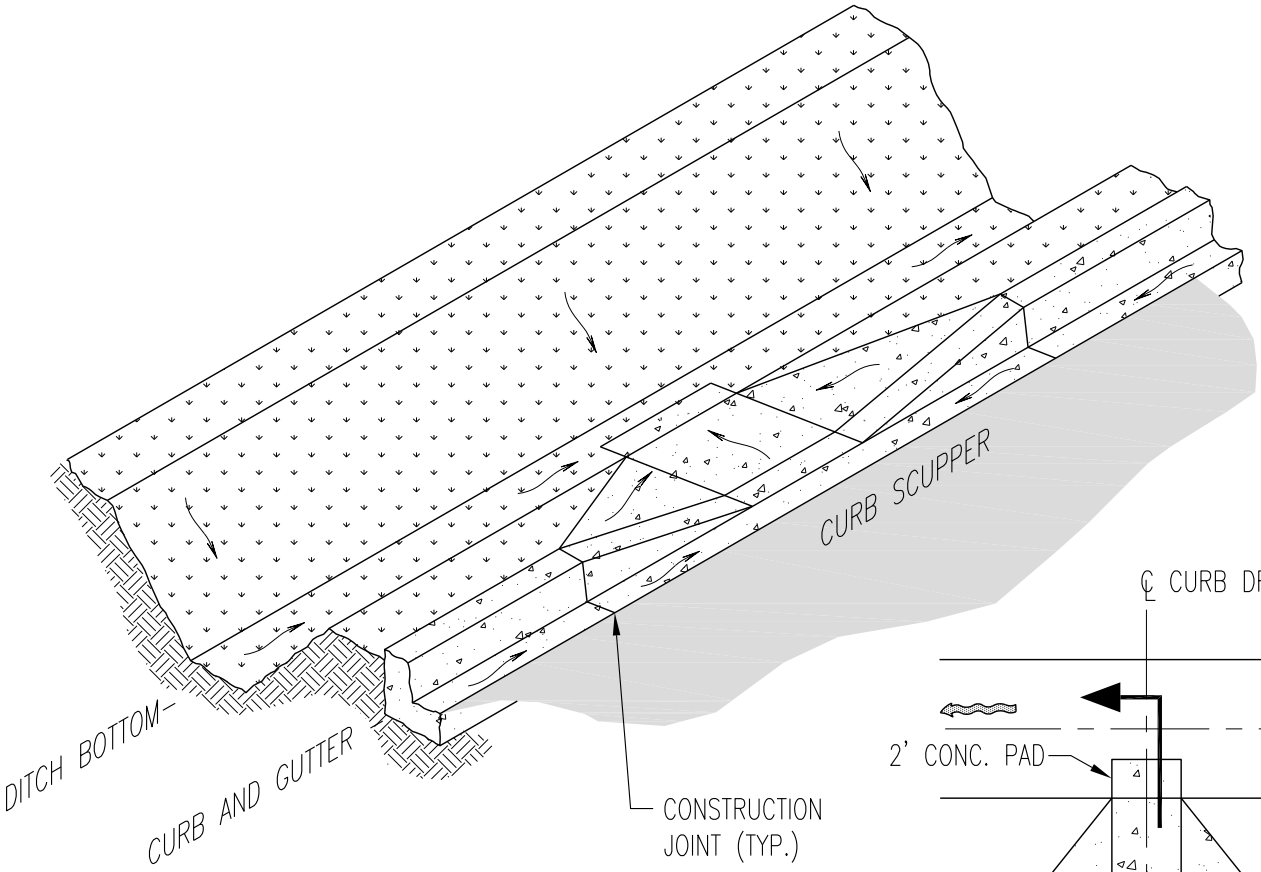

ISOMETRIC
NOT TO SCALE

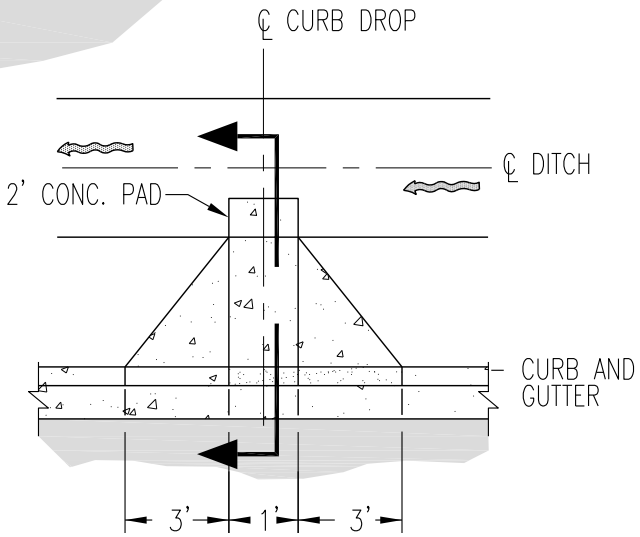

PLAN VIEW
NOT TO SCALE

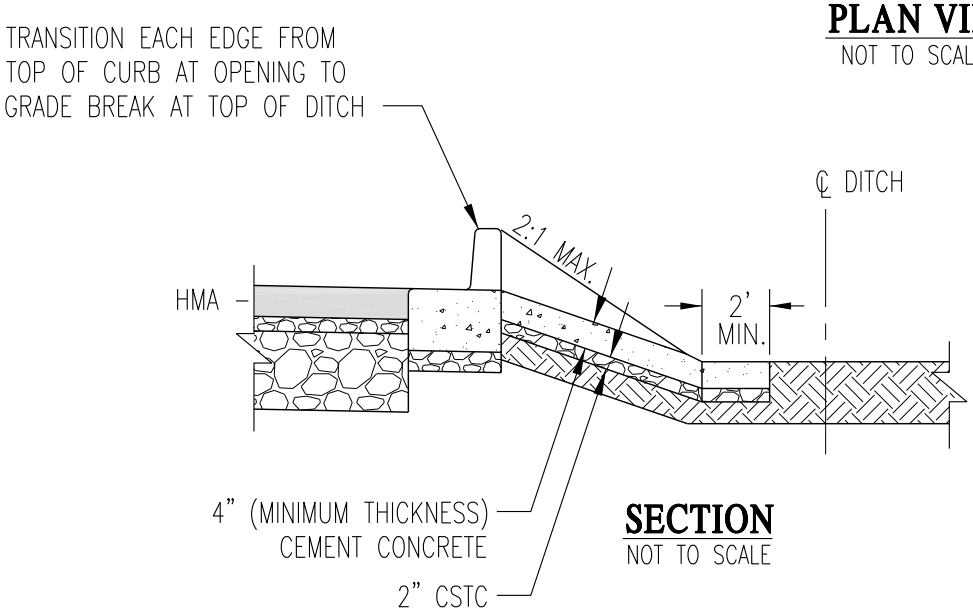

SECTION
NOT TO SCALE

Richland Washington

CURB OPENING INLET DETAIL

PUBLIC WORKS ENGINEERING	
APPR. BY: PKR	DATE: 12.14
DRAWN BY: LD	DWG: S19
CAD FILE: 2013_S19_12_2014	

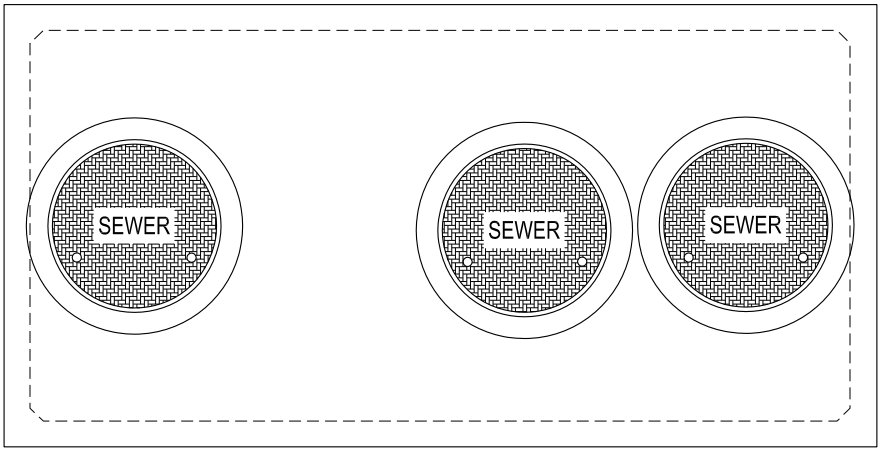

PLAN VIEW
NOT TO SCALE

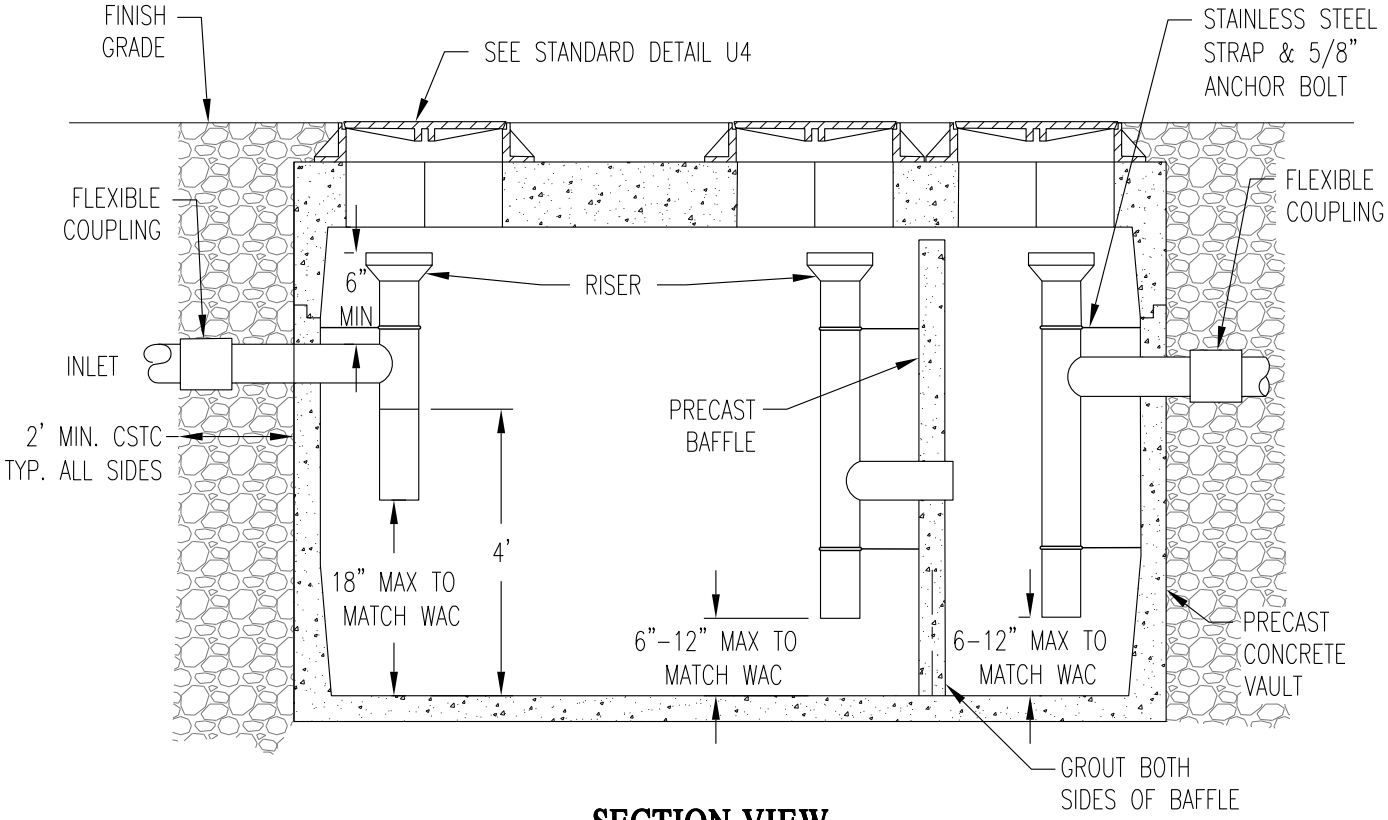

SECTION VIEW
NOT TO SCALE

NOTE:

1. STANDARD DETAIL S20A FOR NOTES.

Richland Washington	TYPICAL GREASE INTERCEPTOR	PUBLIC WORKS ENGINEERING
		APPR. BY: PKR — DATE: 05.14
		DRAWN BY: LD — DWG: S20
		CAD FILE: 2014_S20_05_2014

NOTES FOR GREASE INTERCEPTORS:

1. THIS DEVICE SHALL MEET THE REQUIREMENTS IN THE WAC 246-272C-0230.

2. POSITION RISERS BELOW ACCESS OPENINGS TO ALLOW CLEAR ACCESS TO RISER AND VAULT CHAMBER.

3. CONNECTIONS TO CONCRETE WALL WITH PVC PIPE, REQUIRE KOR-N-SEAL CONNECTORS OR ACxPVC BRANT ADAPTER. SEAL ALL PIPE CONNECTIONS WITH NON-SHRINK GROUT.

4. FILL WITH CLEAN WATER PRIOR TO START UP OF SYSTEM.

5. THE PLANS AND SPECIFICATIONS SHALL ILLUSTRATE PROPERTY BOUNDARIES, PIPING/DRAINAGE DETAILS AND CONNECTIONS TO THE SANITARY SEWER. DETAIL AND ELEVATIONS DRAWINGS OF THE GREASE INTERCEPTOR SHALL INCLUDE UPC APPENDIX DESIGN CALCULATIONS TO SHOW CAPACITY, DETENTION TIME AND REMOVAL EFFICIENCIES.

6. EFFLUENT FROM GREASE INTERCEPTORS SHALL NOT EXCEED 100mg/L TOTAL FAT, OILS AND GREASE DISCHARGED TO THE SANITARY SEWER.

7. GREASE INTERCEPTORS INSTALLED IN PAVED AREAS SHALL COMPLY WITH H-20 LOADING.

8. THE GREASE INTERCEPTOR SHALL BE INSTALLED AND CONNECTED SUCH THAT IT SHALL BE EASILY ACCESSIBLE FOR INSPECTION AND CLEANING AT ALL TIMES. NO SANITARY WASTEWATER SHALL BE CONVEYED TO THE SEPARATOR. A SEPARATE SIDE SEWER SHALL BE REQUIRED TO CARRY SANITARY WASTEWATER TO THE SEWER MAIN. IT SHALL BE PLACED AS CLOSE TO THE SERVICE AS PRACTICAL. MANHOLE COVERS SHALL HAVE AN OPENING OF 24 INCHES IN DIAMETER.

9. PLUMBING/PIPING SHALL BE CONSTRUCTED TO ESTABLISH "PARALLEL FLOW" (90° TO THE TANK BAFFLE) THROUGH THE GREASE INTERCEPTOR. NO RADIUS, BEND OR ELBOW SHALL BE ALLOWED IN THE INLET PIPE FOR A MINIMUM OF 10 FEET OR 20 PIPE DIAMETERS (WHICHEVER IS GREATER) UPSTREAM OF THE INTERCEPTOR.

10. VENTING OF THE INTERCEPTOR SHALL IN ACCORDANCE WITH CHAPTER 4, 5, AND 7 OF THE UNIFORM PLUMBING CODE - 1988 OR AS ADOPTED BY THE CITY.

11. THE DESIGN ENGINEER SHALL PROVIDE THE CITY ENGINEER OR HIS REPRESENTATIVE WITH A LETTER OF INSPECTION CERTIFYING THAT THE INSTALLATION WAS PERFORMED IN ACCORDANCE WITH ALL REGULATIONS AND THE APPROVED PLAN.

12. FINAL INSPECTION IS REQUIRED BY THE CITY ENGINEER OR HIS REPRESENTATIVE PRIOR TO CONNECTION TO THE SANITARY SEWER.

13. THE PROPERTY OWNER SHALL RETAIN OWNERSHIP OF THE GREASE INTERCEPTOR AND SIDE SEWER LINES AND SHALL BE RESPONSIBLE FOR THEIR OPERATION AND MAINTENANCE. A MAINTENANCE RECORD SHALL BE KEPT ON THE PREMISES AT ALL TIMES AND SHALL BE IMMEDIATELY AVAILABLE TO THE CITY ENGINEER OR HIS REPRESENTATIVE UPON REQUEST.

14. THE PROPERTY OWNER SHALL REPORT IMMEDIATELY TO THE CITY ENGINEER OR HIS REPRESENTATIVE, ANY SPILL, SURCHARGE, BYPASS, OR MECHANICAL FAULT OR FAILURE WHICH INTERRUPTS OR OTHERWISE REDUCES THE CAPACITY OR REMOVAL EFFICIENCY OF THE GREASE INTERCEPTOR.

15. GREASE INTERCEPTOR SHALL NOT BE PLACED IN PARKING STALLS OR DRIVE-THROUGHS UNLESS NO OTHER FEASIBLE LOCATION IS AVAILABLE AND PERMISSION IS GRANTED BY THE CITY ENGINEER OR HIS REPRESENTATIVE.

Richland Washington

TYPICAL GREASE INTERCEPTOR NOTES

PUBLIC WORKS ENGINEERING	
APPR. BY: PKR	DATE: 05.14
DRAWN BY: LD	DWG: S20A
CAD FILE: 2014_S20_05_2014	

NOTES:

1. ATTACH THE PIPE SUPPORTS TO THE MANHOLE WITH $\frac{5}{8}$" STAINLESS STEEL EXPANSION BOLTS OR EMBED THE SUPPORTS INTO THE MANHOLE WALL 2".

2. THE FRAME SHALL BE OFFSET SO THAT THE CLIMB-DOWN SPACE IS CLEAR OF THE RISER.

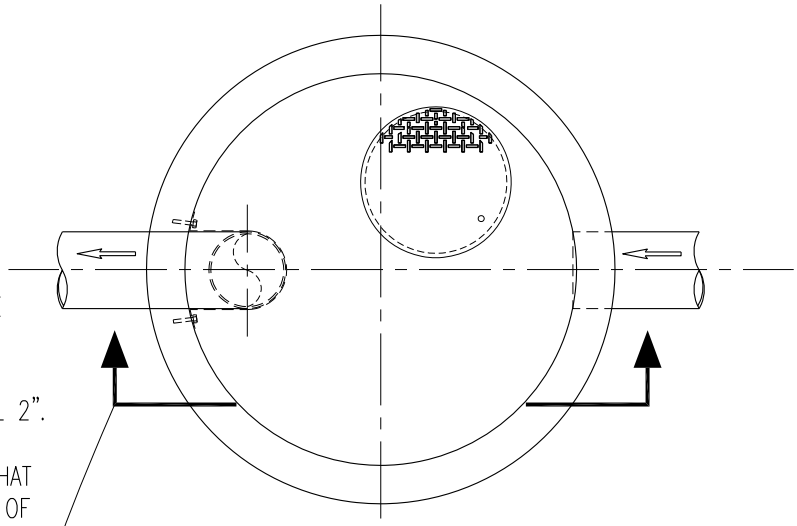

PLAN

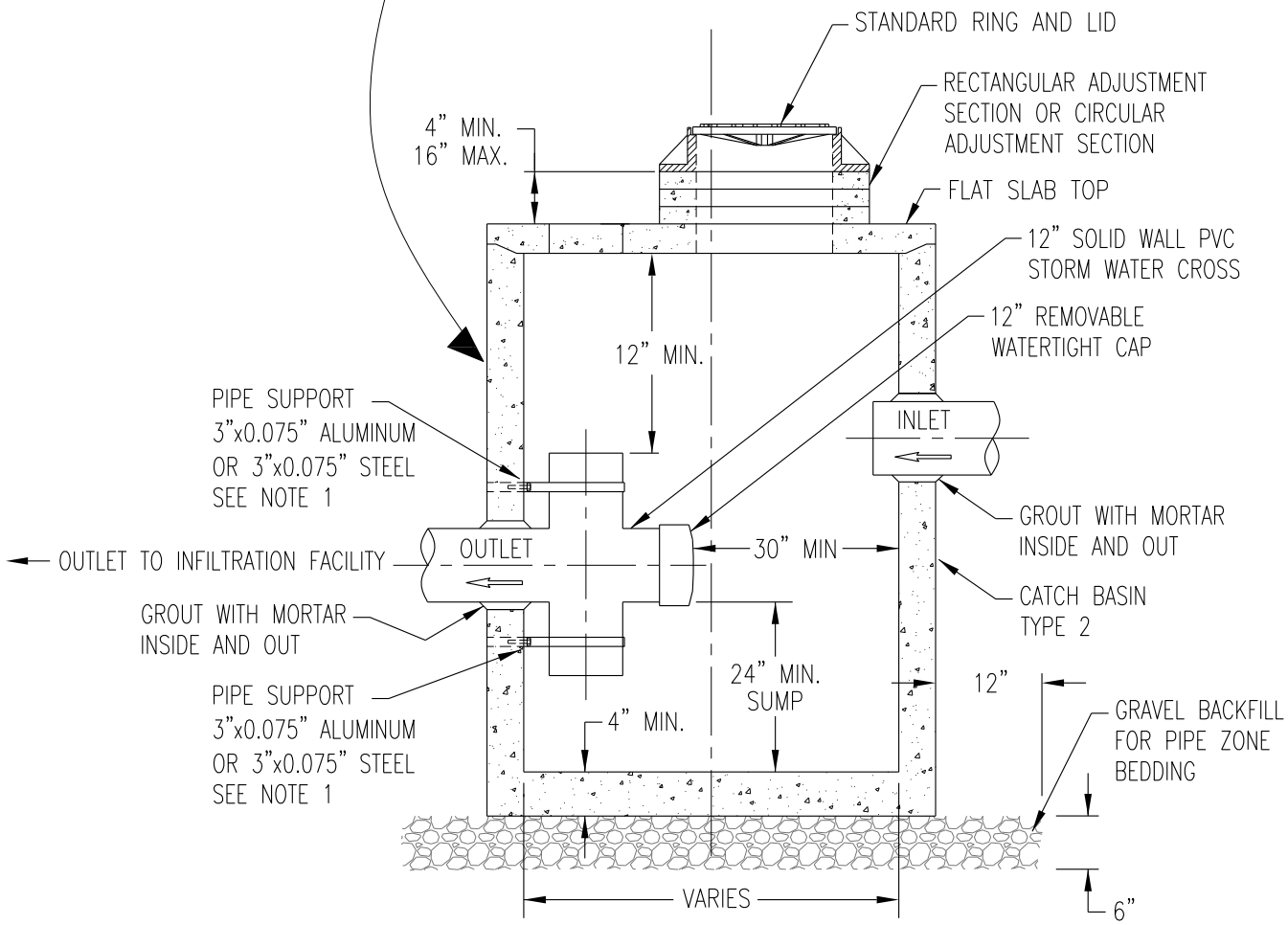

SECTION

Richland Washington	SEDIMENTATION MANHOLE DETAIL	PUBLIC WORKS ENGINEERING
		APPR. BY: PKR — DATE: 06.19
		DRAWN BY: EY — DWG: S21
		CAD FILE: 2018_S21_06_2019

Standard Details
Water

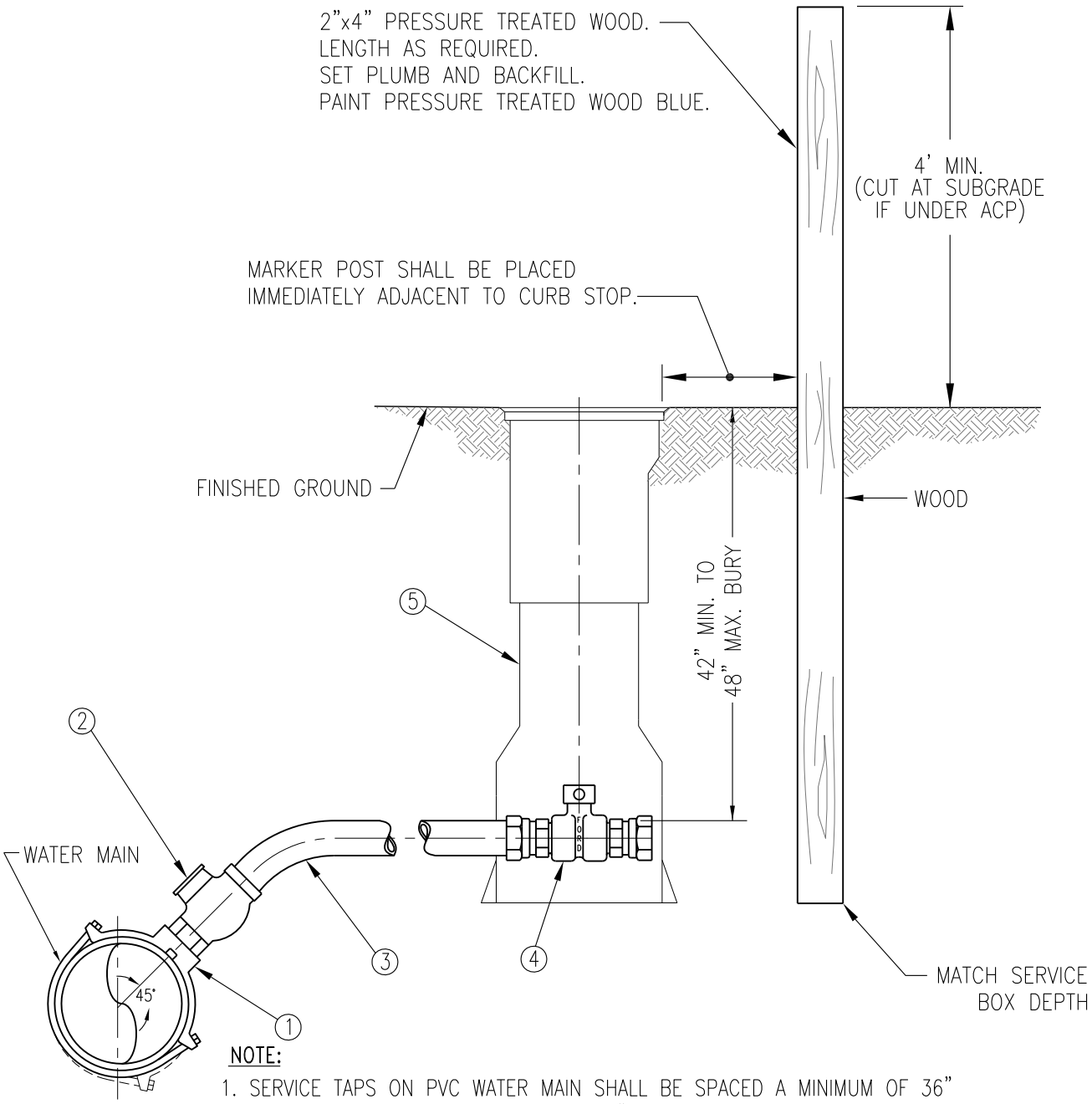

NOTE:

1. SERVICE TAPS ON PVC WATER MAIN SHALL BE SPACED A MINIMUM OF 36" IF TAPPED ON THE SAME SIDE AND 18" IF STAGGERED. TAP SHALL BE NO CLOSER THAN 24" FROM PIPE BELL.

MATERIAL LIST		
ITEM NO.	NO. REQ'D	DESCRIPTION
1	1	SERVICE SADDLE
2	1	CORPORATION STOP
3	1	1" "K-TYPE" COPPER TUBING-CONTINUOUS, NO JOINTS ALLOWED
4	1	CURB STOP
5	1	SERVICE BOX

Richland Washington

1" STREET SERVICE ASSEMBLY

PUBLIC WORKS ENGINEERING	
APPR. BY: PKR	DATE: 09.13
DRAWN BY: LD	DWG: W1
CAD FILE: 2013_W1_09_2013	

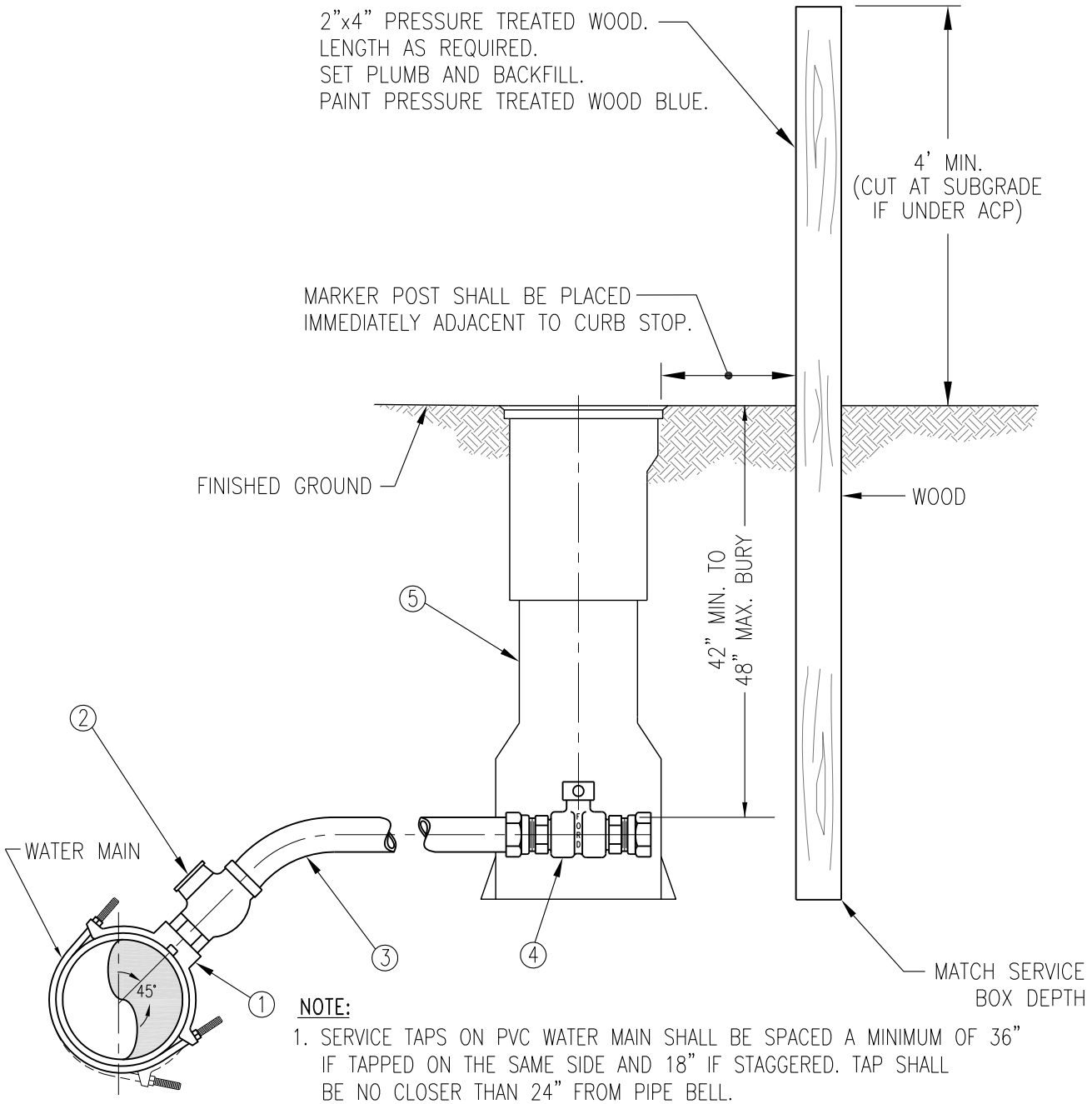

NOTE:

1. SERVICE TAPS ON PVC WATER MAIN SHALL BE SPACED A MINIMUM OF 36" IF TAPPED ON THE SAME SIDE AND 18" IF STAGGERED. TAP SHALL BE NO CLOSER THAN 24" FROM PIPE BELL.

MATERIAL LIST		
ITEM NO.	NO. REQ'D	DESCRIPTION
1	1	SERVICE SADDLE
2	1	CORPORATION STOP
3	1	2" HDPE CTS TUBING, NO JOINTS ALLOWED
4	1	CURB STOP
5	1	SERVICE BOX

Richland Washington

2" STREET SERVICE ASSEMBLY

PUBLIC WORKS ENGINEERING	
APPR. BY: PKR	DATE: 09.13
DRAWN BY: LD	DWG: W2
CAD FILE: 2013_W2_09_2013	

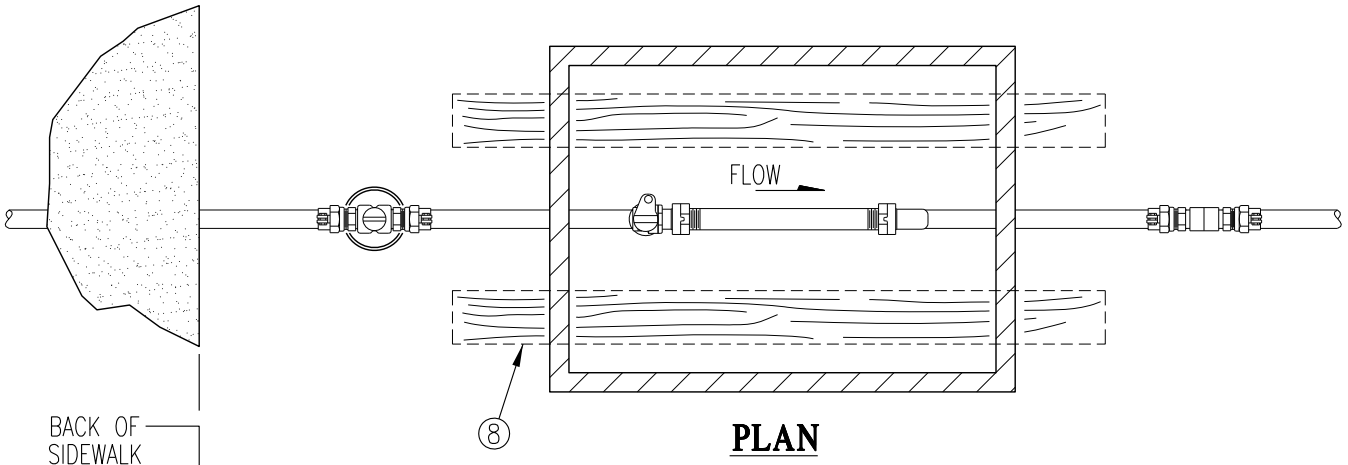

PLAN

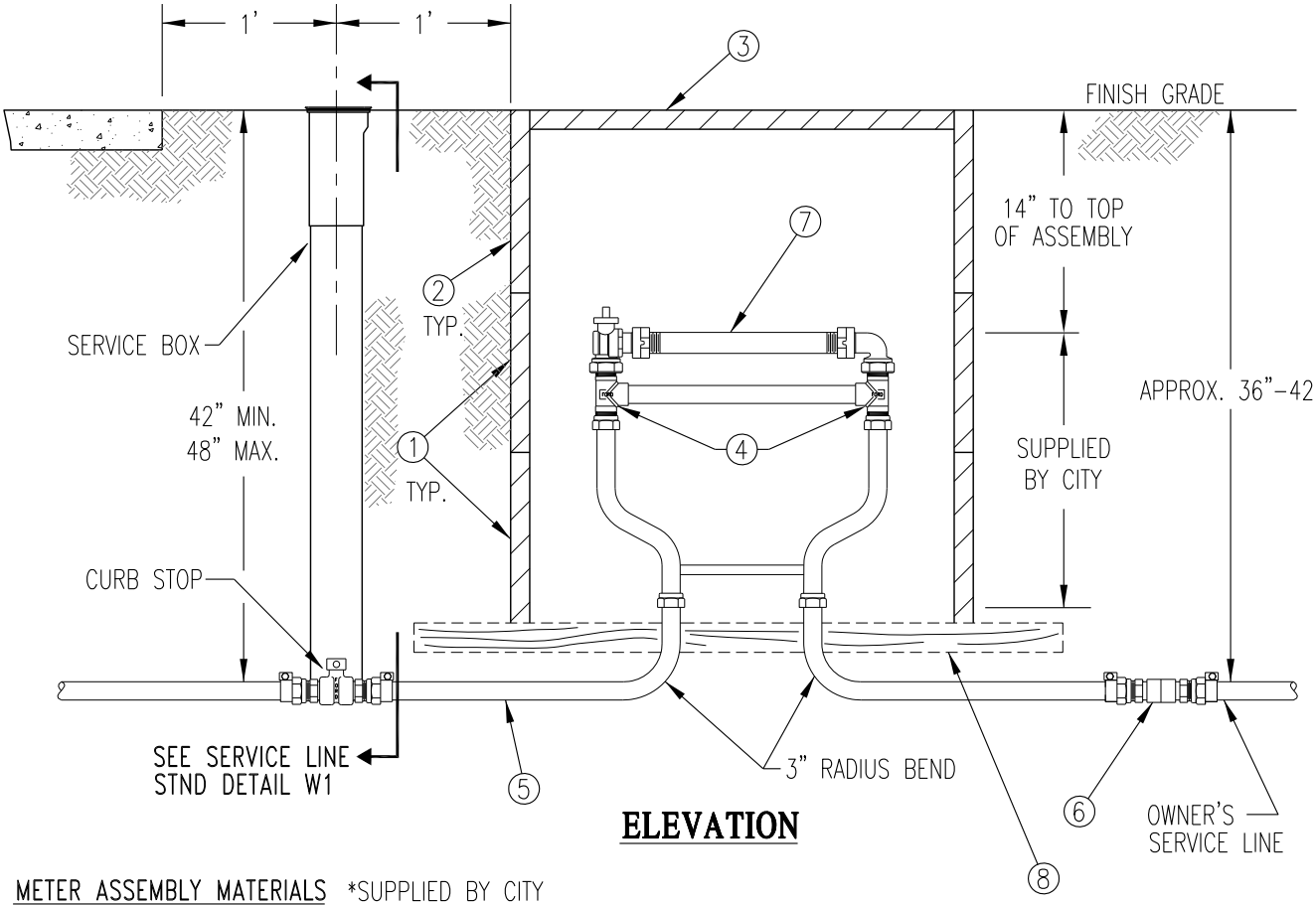

ELEVATION

METER ASSEMBLY MATERIALS *SUPPLIED BY CITY

1. 2 EA. METER BOX, 12", MIDDLE SECTION,
2. 1 EA. METER BOX, 12". TOP SECTION,
3. 1 EA. METER BOX COVER, W/CAST IRON LID, TOP OF METER BOX TO BE LEVEL WITH SURROUNDING SURFACE.

*4. 1" METER SETTER

5. 5' TUBING, COPPER, 1" TYPE K, SOFT-ROLLED.
6. 1" COUPLING

*7. 1" METER JUMPER

8. 2 EA. PRESSURE TREATED 2" X 4" X 4' LONG.

Richland Washington

WATER METER ASSEMBLY FOR 3/4" & 1" METERS

PUBLIC WORKS ENGINEERING	
APPR. BY: PKR	DATE: 09.13
DRAWN BY: LD	DWG: W3
CAD FILE: 2013_W3_09_2013	

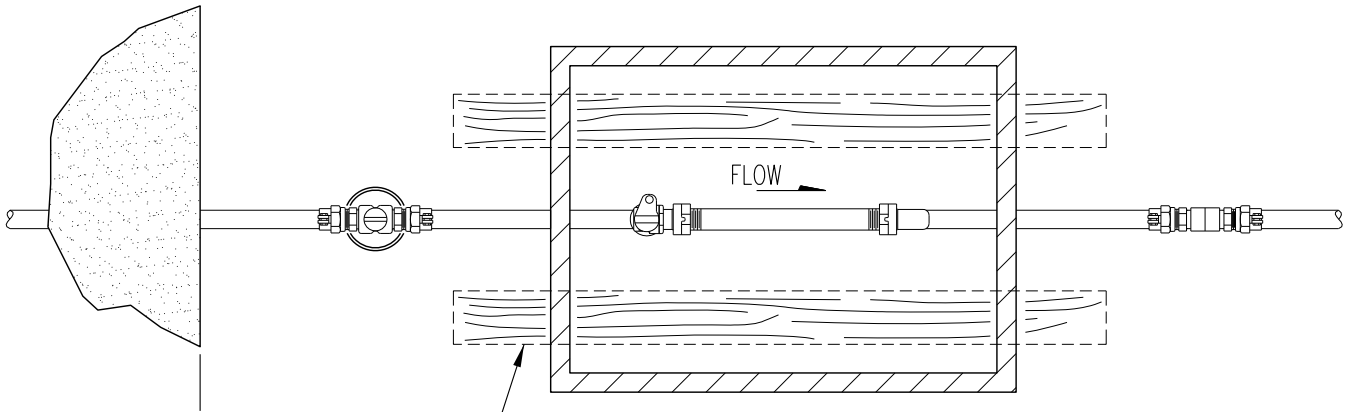

PLAN

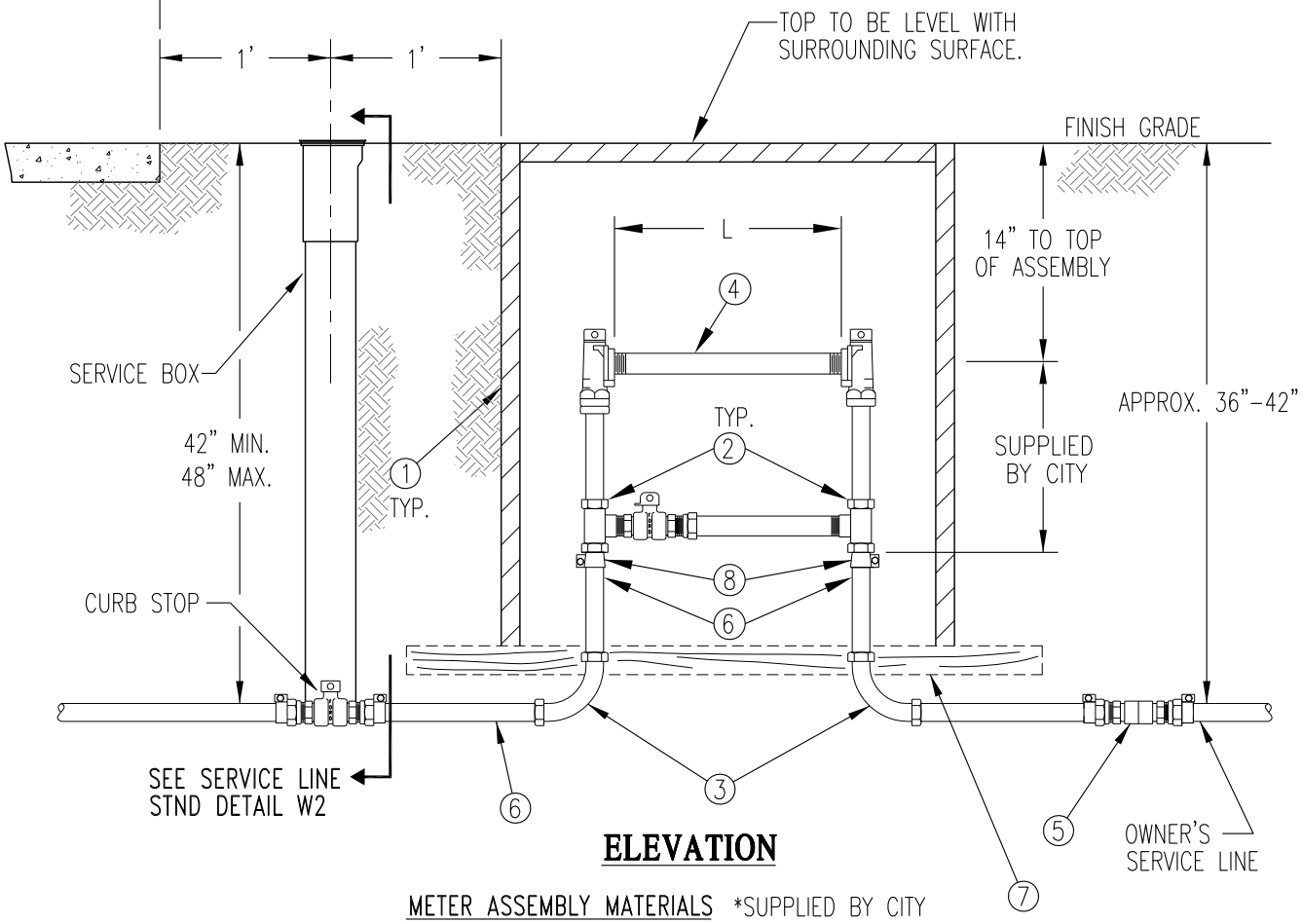

ELEVATION

METER ASSEMBLY MATERIALS *SUPPLIED BY CITY

2" METER

1. METER BOX (CONCRETE) (1-TOP SECTION, 2-MIDDLE SECTIONS & 1-LID).
* 2. 2" METER SETTER (WITH VERTICAL CONNECTION TEES).
3. 2" x 90° COMPRESSION ELL.
* 4. 2" GALV. STEEL METER JUMPER
5. 2" COUPLING.
6. 2" TYPE "L" COPPER TUBING.
7. 2 EA. PRESSURE TREATED 2" x 4" x 4' LONG.
8. COUPLING.

Richland Washington

WATER METER ASSEMBLY FOR 2" METERS

PUBLIC WORKS ENGINEERING	
APPR. BY: PKR	DATE: 09.13
DRAWN BY: LD	DWG: W4
CAD FILE: 2013_W4_09_2013	

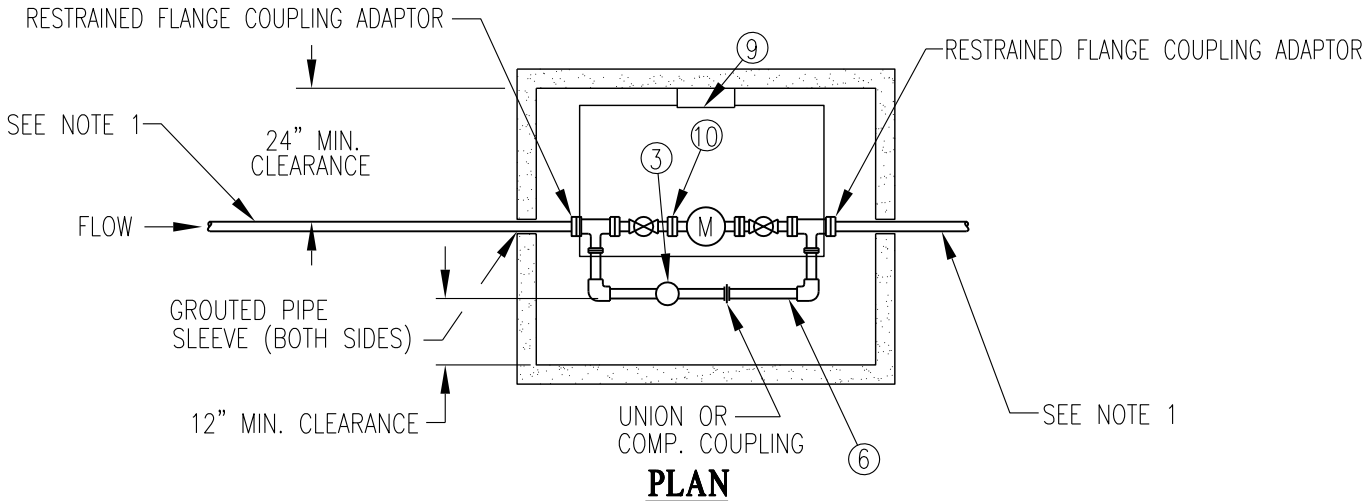

PLAN

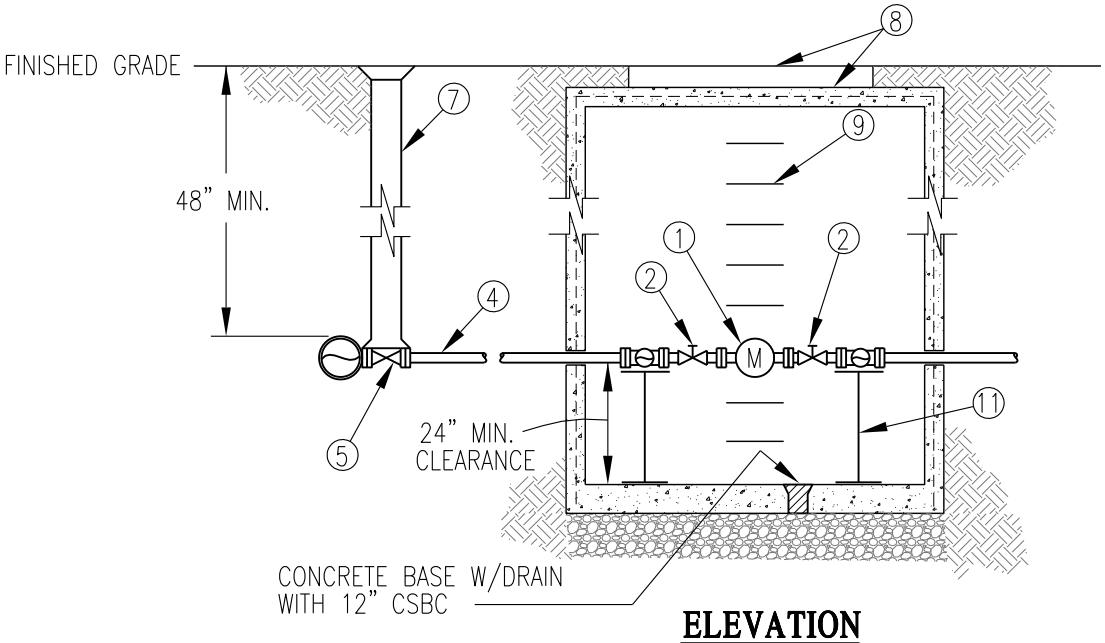

ELEVATION

MATERIALS:

1. WATER METER, SUPPLIED BY CITY (METER LAY LENGTH PROVIDED BY CITY)
2. GATE VALVE, W/HANDWHEEL.
3. BALL VALVE W/LOCKING CAP
4. SERVICE LINE, CLASS 50 DUCTILE IRON.
5. GATE VALVE FL x MJ, W/2" SQUARE OPERATING NUT.
6. 2" TYPE-L COPPER.
7. VALVE BOX
8. REINFORCED PRE-CAST CONCRETE VAULT (SEE CHART FOR VAULT SIZE)
9. VAULT STEPS AT 12" SPACING.
10. DISMANTLING JOINT
11. 4 EA.- ADJUSTABLE STANDS

METER SIZE	VAULT SIZE
3"	7' x 4' x 8' TALL W/ 3' x 3' ALUMINUM ACCESS DOOR
4"	9' x 5' x 7'-2" TALL W/ 36" x 72" ALUMINUM ACCESS DOOR
6"	11'-2" x 5'-8" x 7'-2" TALL W/ 36" x 72" ALUMINUM ACCESS DOOR

NOTES:

1. ALL RESTRAINED JOINT FITTINGS 60' EACH SIDE OF VAULT.

Richland Washington

COMMERCIAL WATER METER

PUBLIC WORKS ENGINEERING	
APPR. BY: PKR	DATE: 03.2012
DRAWN BY: SC NYBY	DWG: W5
CAD FILE: 2012_W5_03_2012	

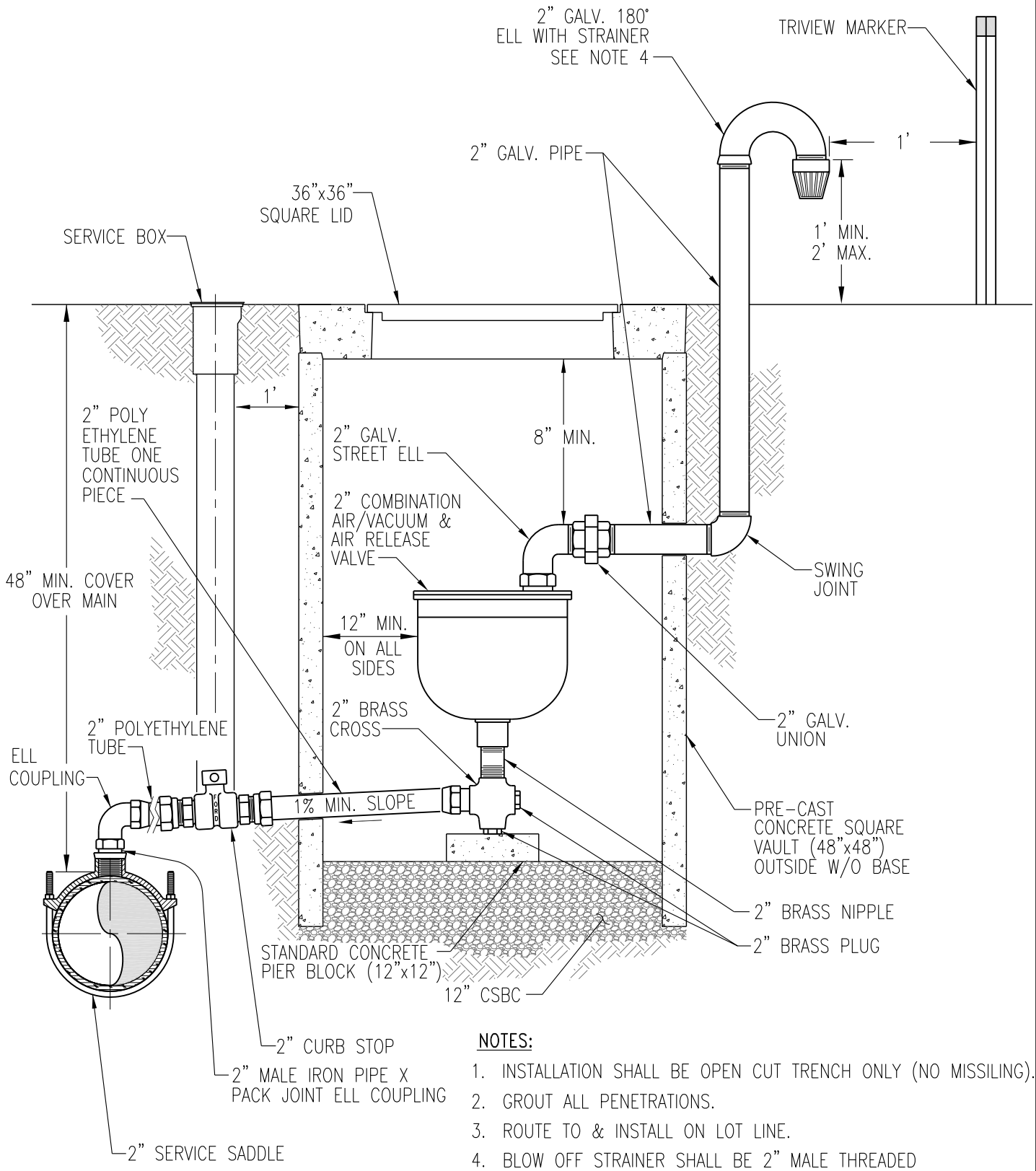

NOTES:

1. INSTALLATION SHALL BE OPEN CUT TRENCH ONLY (NO MISSILING).
2. GROUT ALL PENETRATIONS.
3. ROUTE TO & INSTALL ON LOT LINE.
4. BLOW OFF STRAINER SHALL BE 2" MALE THREADED STRAINER WITH SCREENING.

Richland Washington

2" COMBINATION AIR & VACUUM VALVE ASSEMBLY

PUBLIC WORKS ENGINEERING	
APPR. BY: PKR	DATE: 03.2018
DRAWN BY: EY	DWG: W6
CAD FILE: 2012_W6_03_2018	

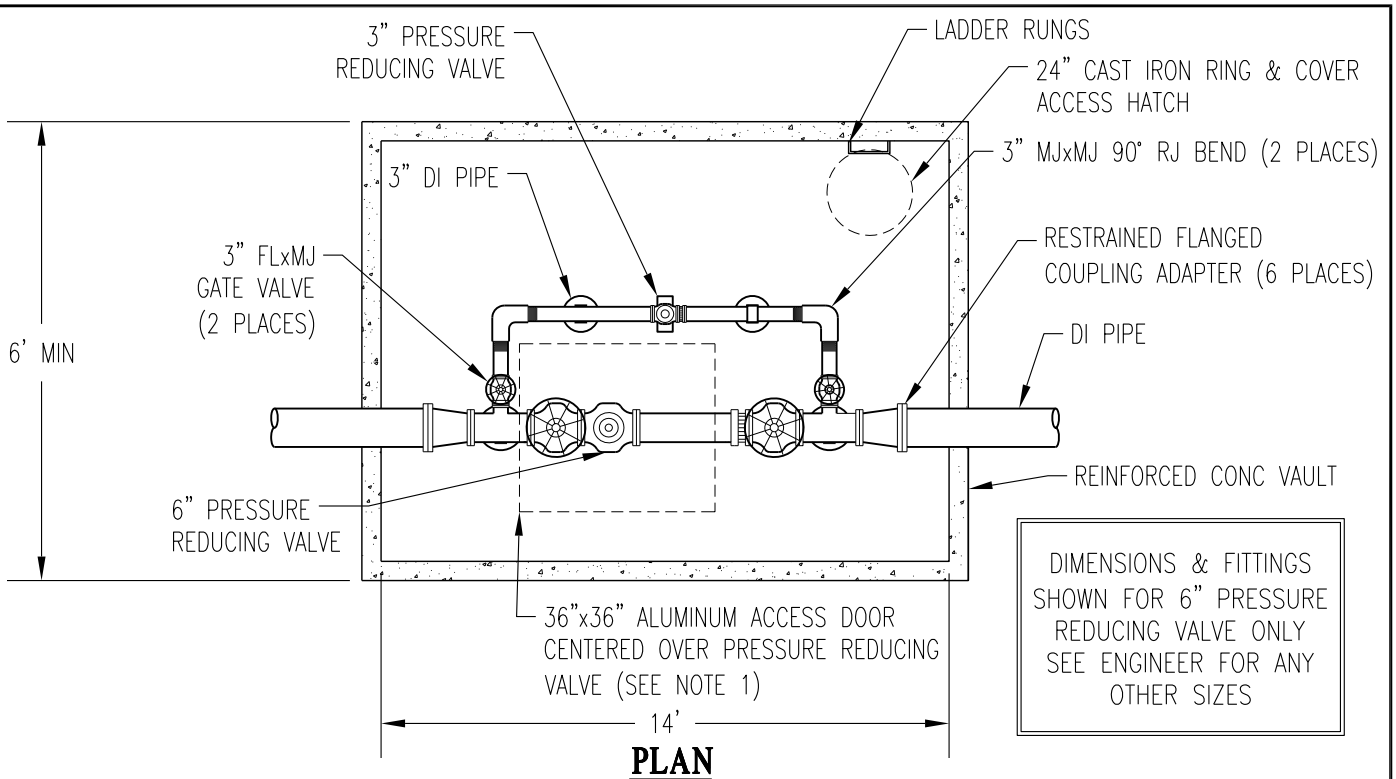

DIMENSIONS & FITTINGS SHOWN FOR 6" PRESSURE REDUCING VALVE ONLY SEE ENGINEER FOR ANY OTHER SIZES

PLAN

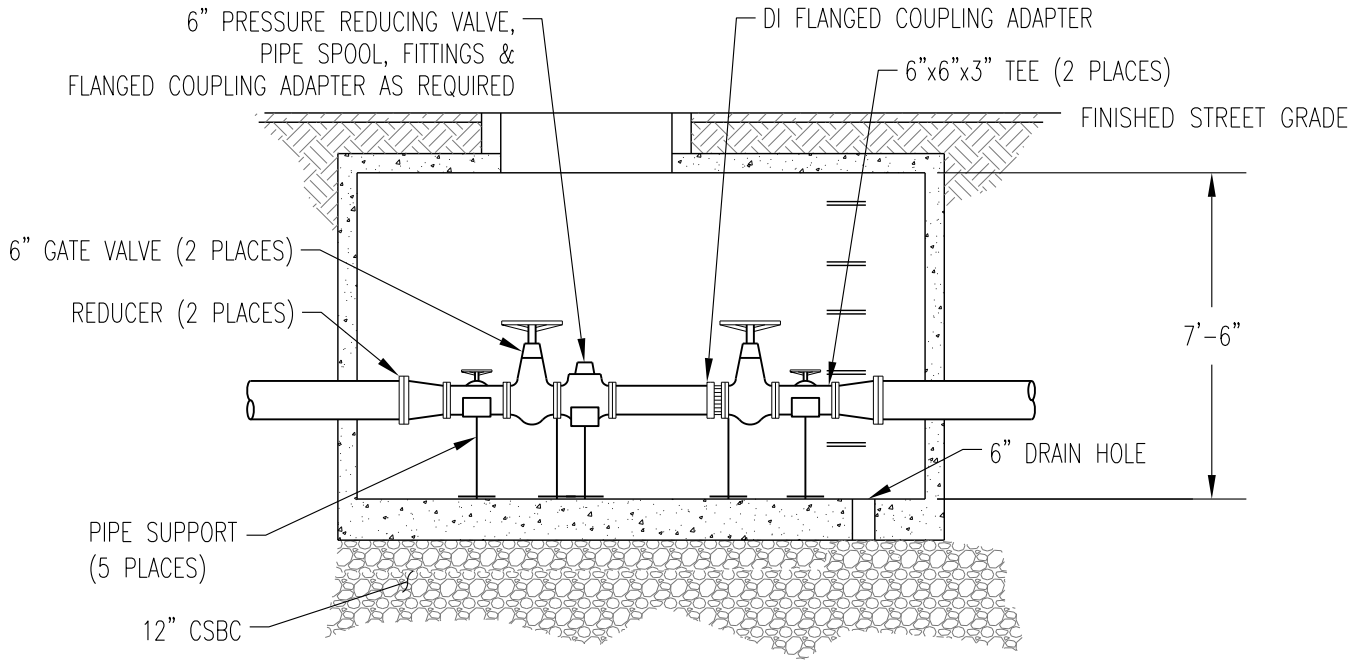

ELEVATION

NOTES:

1. ALUMINUM ACCESS DOOR VAULTS LOCATED IN TRAFFIC AREAS SHALL HAVE TRAFFIC RATED DOORS.
2. ALL RESTRAINED JOINTS EACH SIDE OF VAULT. SEE STANDARD DETAIL W16-B.
3. GROUT ALL PENETRATIONS
4. CITY OF RICHLAND TO INSTALL CONTRACTOR SUPPLIED PRESSURE REDUCING VALVE PARTS. CONTRACTOR TO INSTALL VAULT AND PIPING STRAIGHT THROUGH.

Richland Washington

WATER PRESSURE REDUCING ASSEMBLY

PUBLIC WORKS ENGINEERING	
APPR. BY: PKR	DATE: 03.2018
DRAWN BY: EY	DWG: W8
CAD FILE: 2013_W8_03_2018	

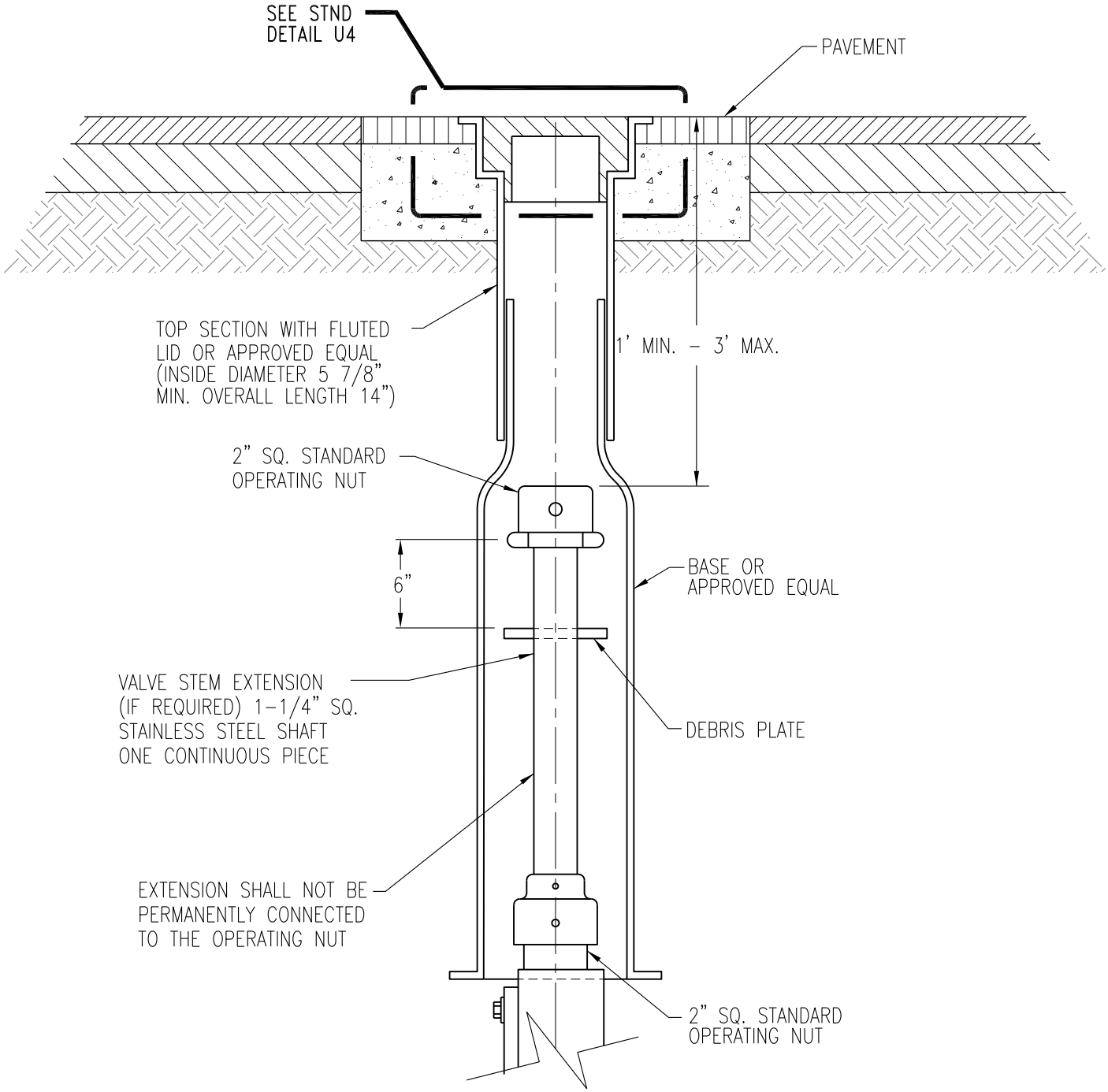

WATER VALVE BOX

PUBLIC WORKS ENGINEERING	
APPR. BY: PKR	DATE: 12.2010
DRAWN BY: SC NYBY	DWG: W9
CAD FILE: 2012_W9_12_2010	

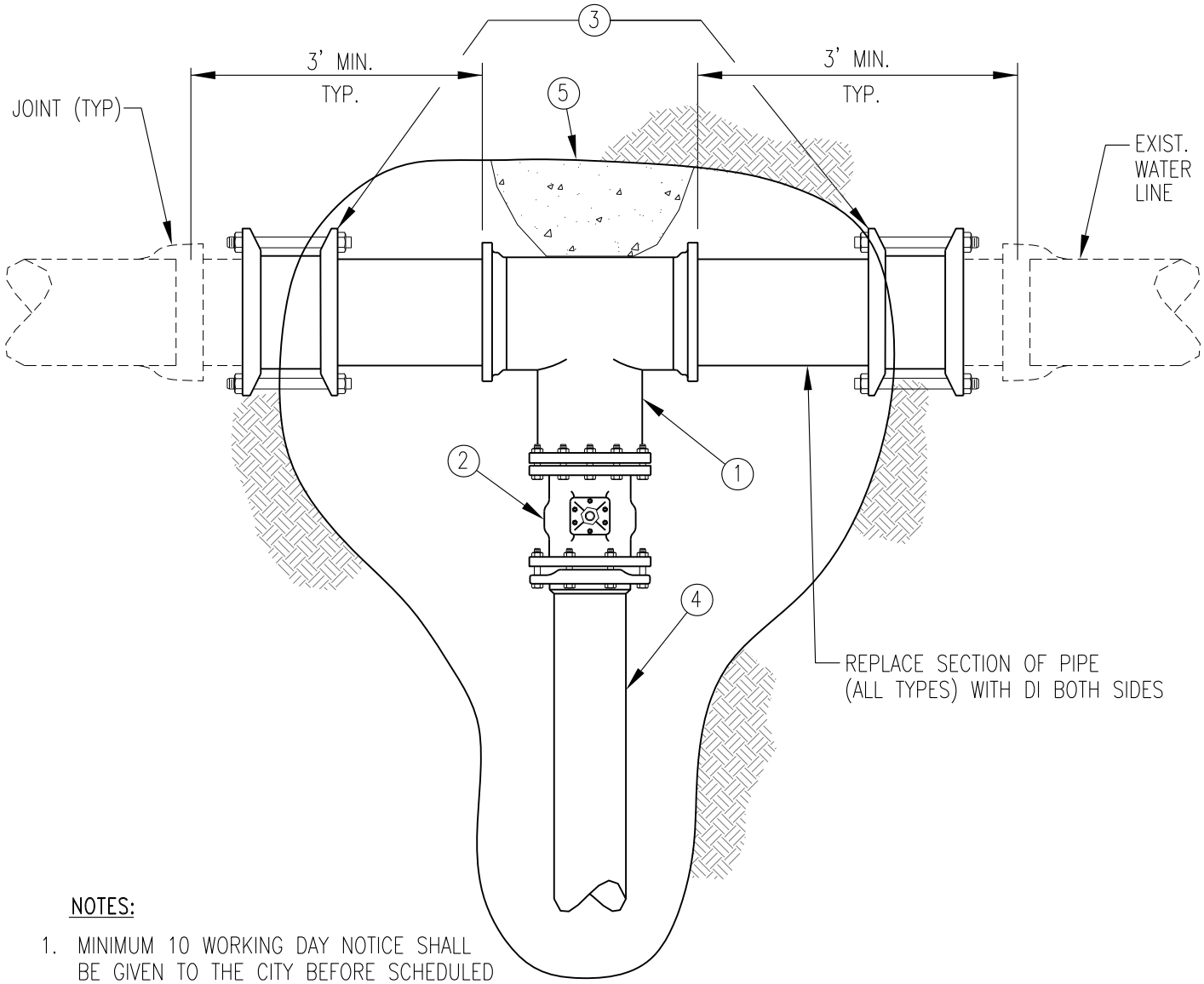

NOTES:

1. MINIMUM 10 WORKING DAY NOTICE SHALL BE GIVEN TO THE CITY BEFORE SCHEDULED CUT-IN TO THE EXISTING WATERLINE. (CONSTRUCTION PLANS MUST BE APPROVED BY CITY ENGINEER PRIOR TO THIS NOTICE).
2. CONTRACTOR IS TO FURNISH ALL MATERIALS AS REQUIRED & HAVE LOCATION EXCAVATED AND SHORED SAFELY WITH MINIMUM OF 2' CLEARANCE OUTSIDE OF ALL NEW FITTINGS AS SHOWN & 18" CLEARANCE UNDER PIPE. PIPE & FITTINGS TO BE "SWABBED & BAGGED" 24 HOURS BEFORE CUT-IN.
3. AFTER THE CUT-IN BY CITY, CONTRACTOR SHALL INSTALL THRUST BLOCK & VALVE BOX, BACKFILL EXCAVATED AREA & PROVIDE APPROPRIATE STREET PATCH IF NECESSARY.

MATERIALS BY CONTRACTOR

1. MJxMJxFL TEE
2. *MJxFL VALVE W/ STANDARD CONC PIER BLOCK
3. TRANSITION COUPLINGS
4. NEW WATER LINE
5. THRUST BLOCK

*BUTTERFLY VALVE FOR 10" AND LARGER, NOT SHOWN FOR CLARITY

Richland Washington

CUT-IN TO EXISTING WATER LINE

PUBLIC WORKS ENGINEERING	
APPR. BY: PKR	DATE: 03.2018
DRAWN BY: EY	DWG: W10
CAD FILE: 2014_W10_03_2018	

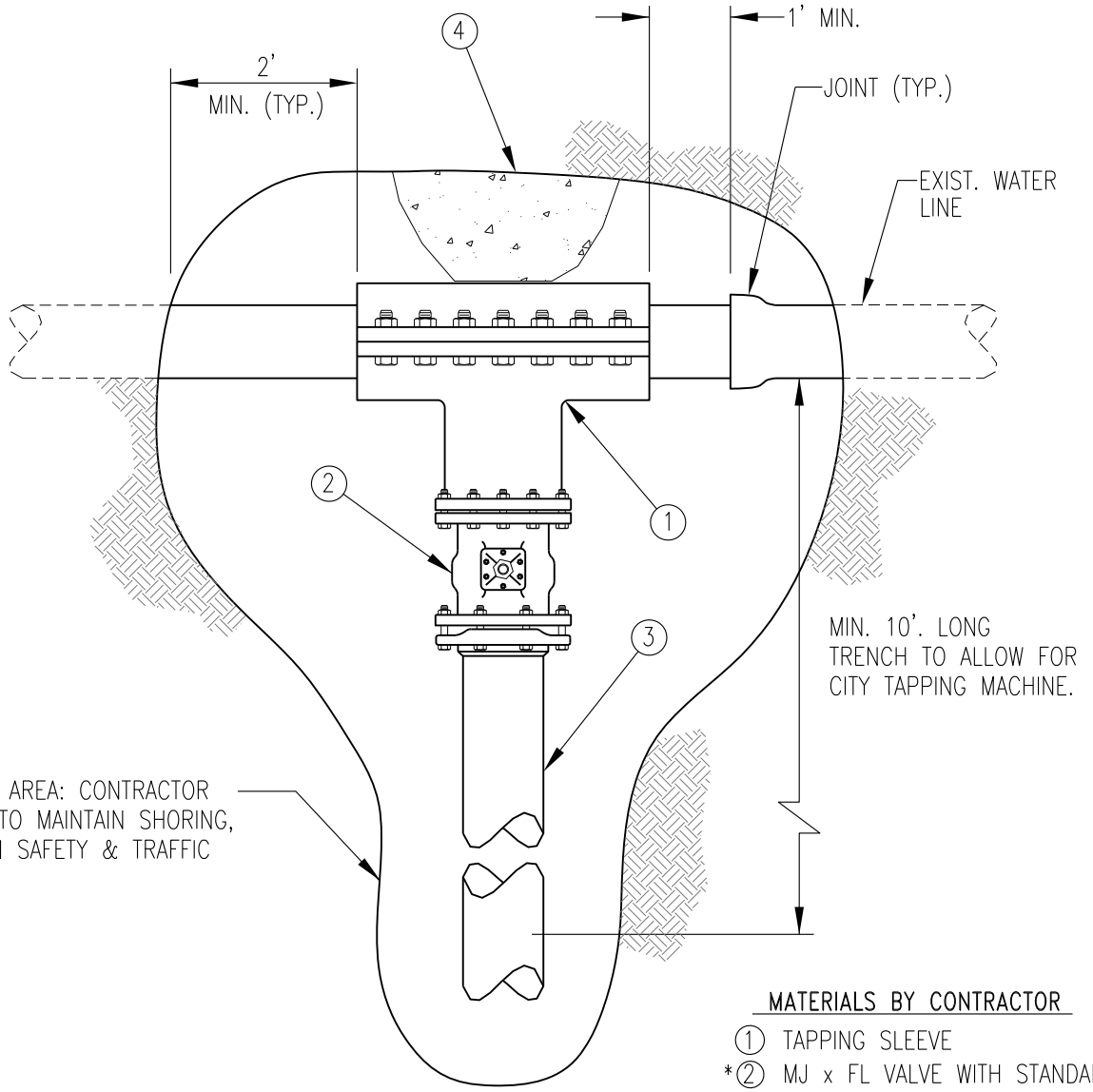

MATERIALS BY CONTRACTOR

1. TAPPING SLEEVE
*2. MJ x FL VALVE WITH STANDARD CONCRETE PIER BLOCK
3. NEW WATER LINE EXTENSION
4. THRUST BLOCK

NOTES:

1. MINIMUM 10 WORKING DAY NOTICE SHALL BE GIVEN TO THE CITY BEFORE SCHEDULED TAP TO THE EXISTING WATER LINE. (CONSTRUCTION PLANS MUST BE APPROVED BY CITY ENGINEER PRIOR TO THIS NOTICE).

2. CONTRACTOR IS TO FURNISH ALL MATERIALS AS REQUIRED AND HAVE LOCATION EXCAVATED WITH MINIMUM OF 2' CLEARANCE OUTSIDE OF ALL NEW FITTINGS AS SHOWN & 18" CLEARANCE UNDER PIPE.

3. AFTER THE TAP BY CITY, CONTRACTOR SHALL INSTALL THRUST BLOCK & VALVE BOX, BACKFILL EXCAVATED AREA & PROVIDE APPROPRIATE STREET PATCH IF NECESSARY.

* TAPPING VALVES ARE REQUIRED ON 12 INCH DIAMETER & LARGER & ALL SIZE ON SIZE TAPS.

Richland Washington

TAP ON EXISTING WATER LINE

PUBLIC WORKS ENGINEERING	
APPR. BY: PKR	DATE: 12.2010
DRAWN BY: SC NYBY	DWG: W11
CAD FILE: 2012_W11_12_2010	

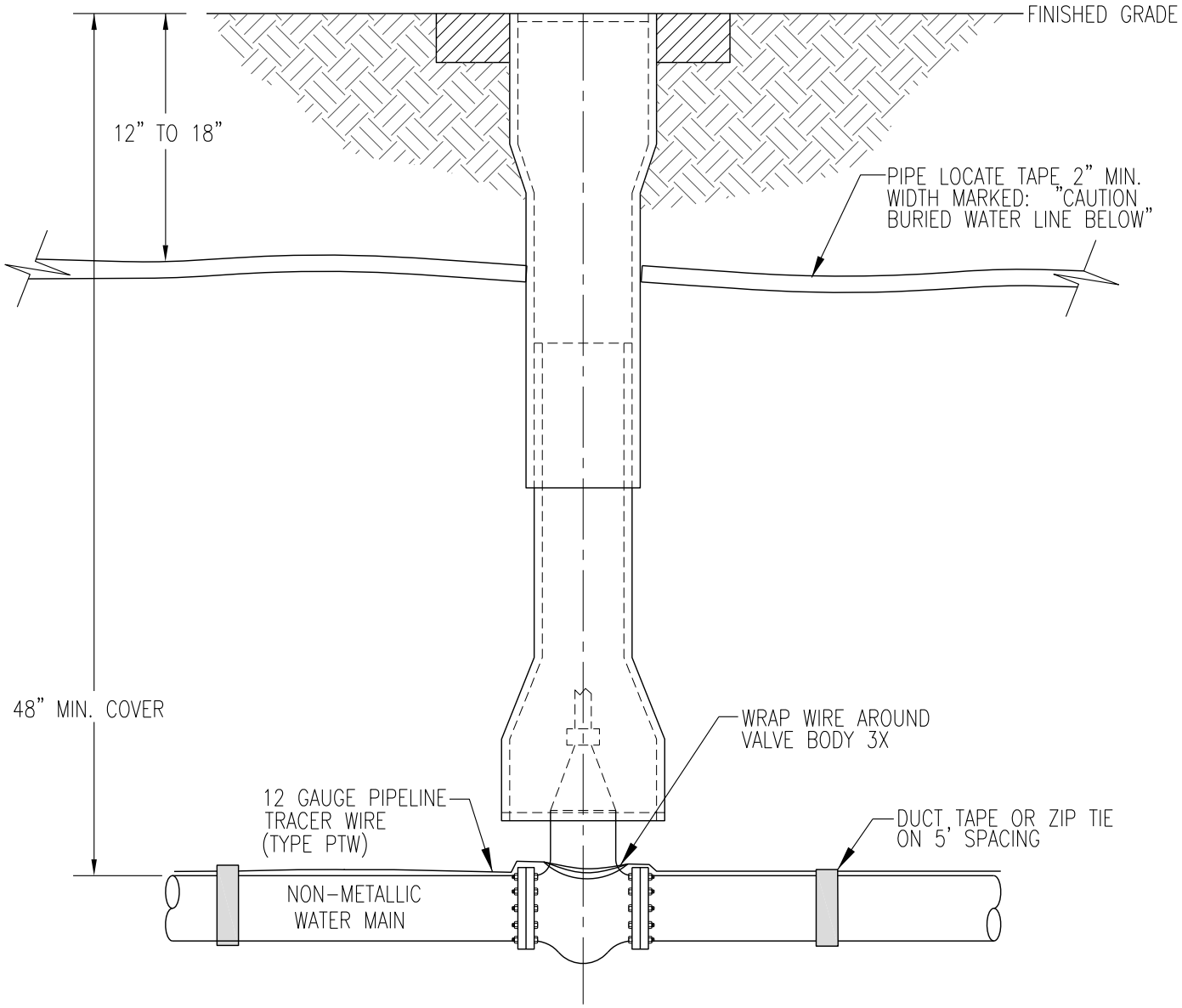

NOTES:

1. PRIOR TO PAVING, CONTRACTOR MUST SCHEDULE WITH CITY TO TEST WIRE FOR ELECTRICAL CONTINUITY.
2. INSTALL ELECTRICAL WATER TIGHT CONNECTORS (GEL PACKS) THAT SNAP TOGETHER AT ALL SPLICES.

Richland Washington	TRACER WIRE INSTALLATION (NON-METALLIC WATER MAINS)	PUBLIC WORKS ENGINEERING
		APPR. BY: PKR — DATE: 03.2018
		DRAWN BY: EY — DWG: W12
		CAD FILE: 2012_W12_03_2018

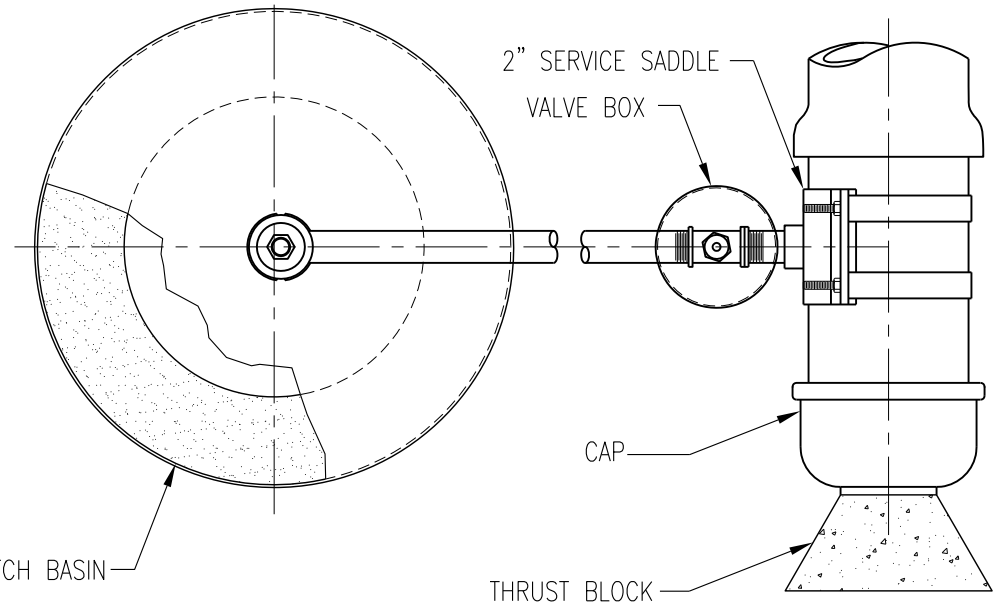

PLAN

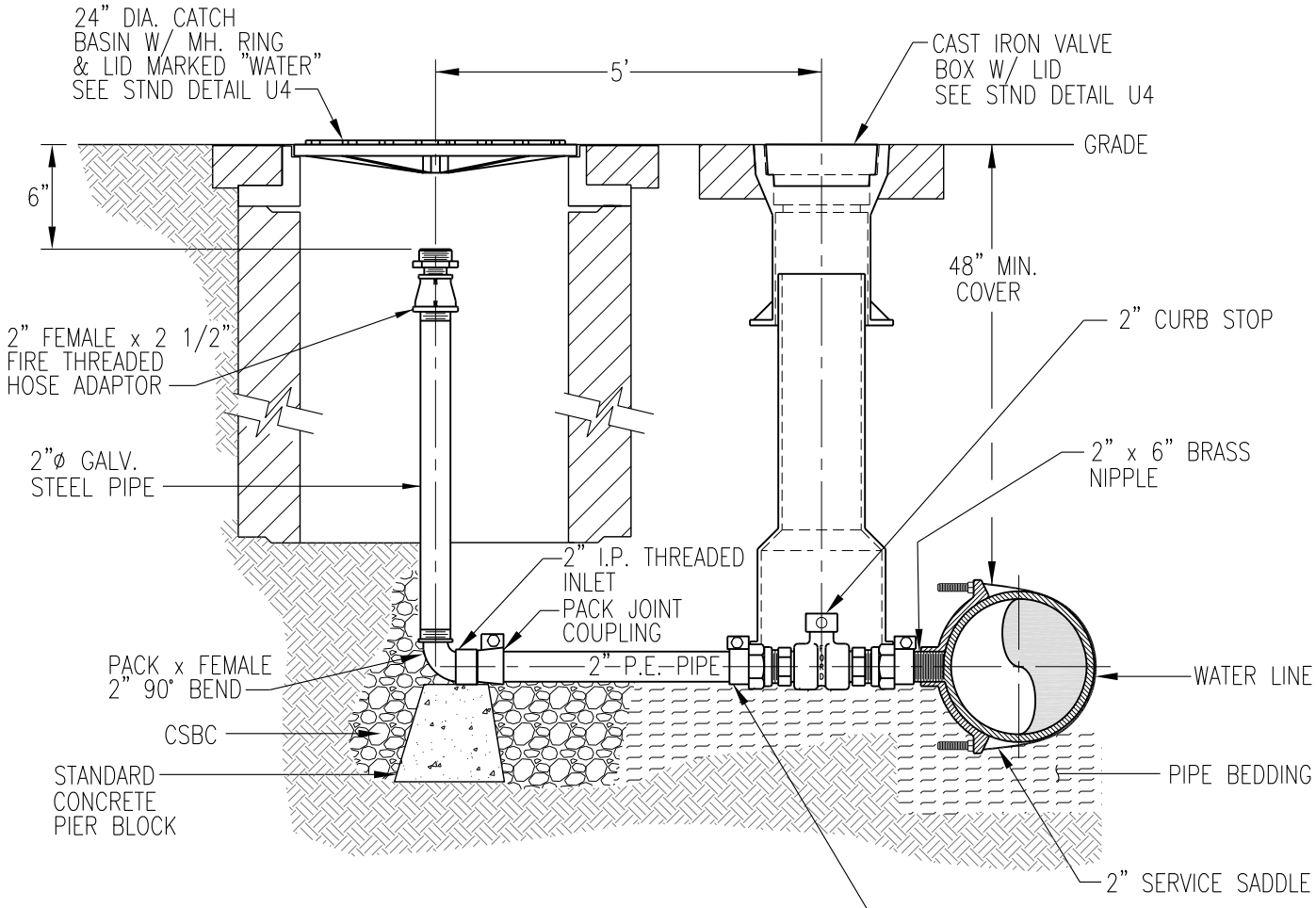

ELEVATION

Richland Washington

BLOW-OFF ASSEMBLY

PUBLIC WORKS ENGINEERING	
APPR. BY: PKR	DATE: 03.2012
DRAWN BY: SC NYBY	DWG: W13
CAD FILE: 2012_W13_03_2012	

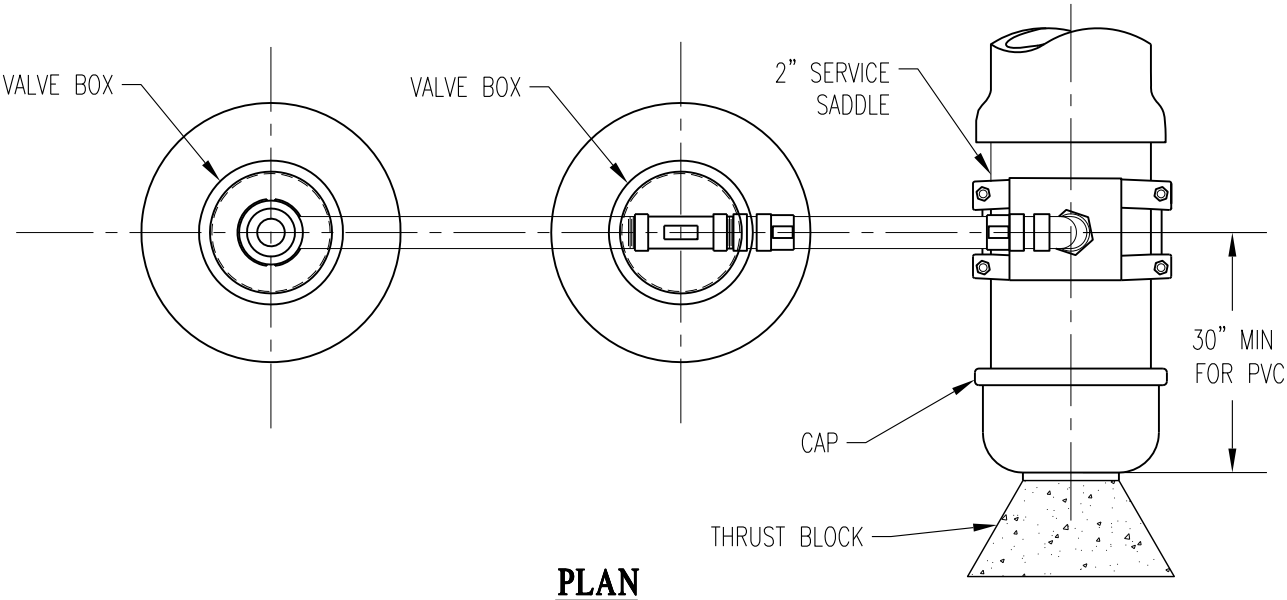

PLAN

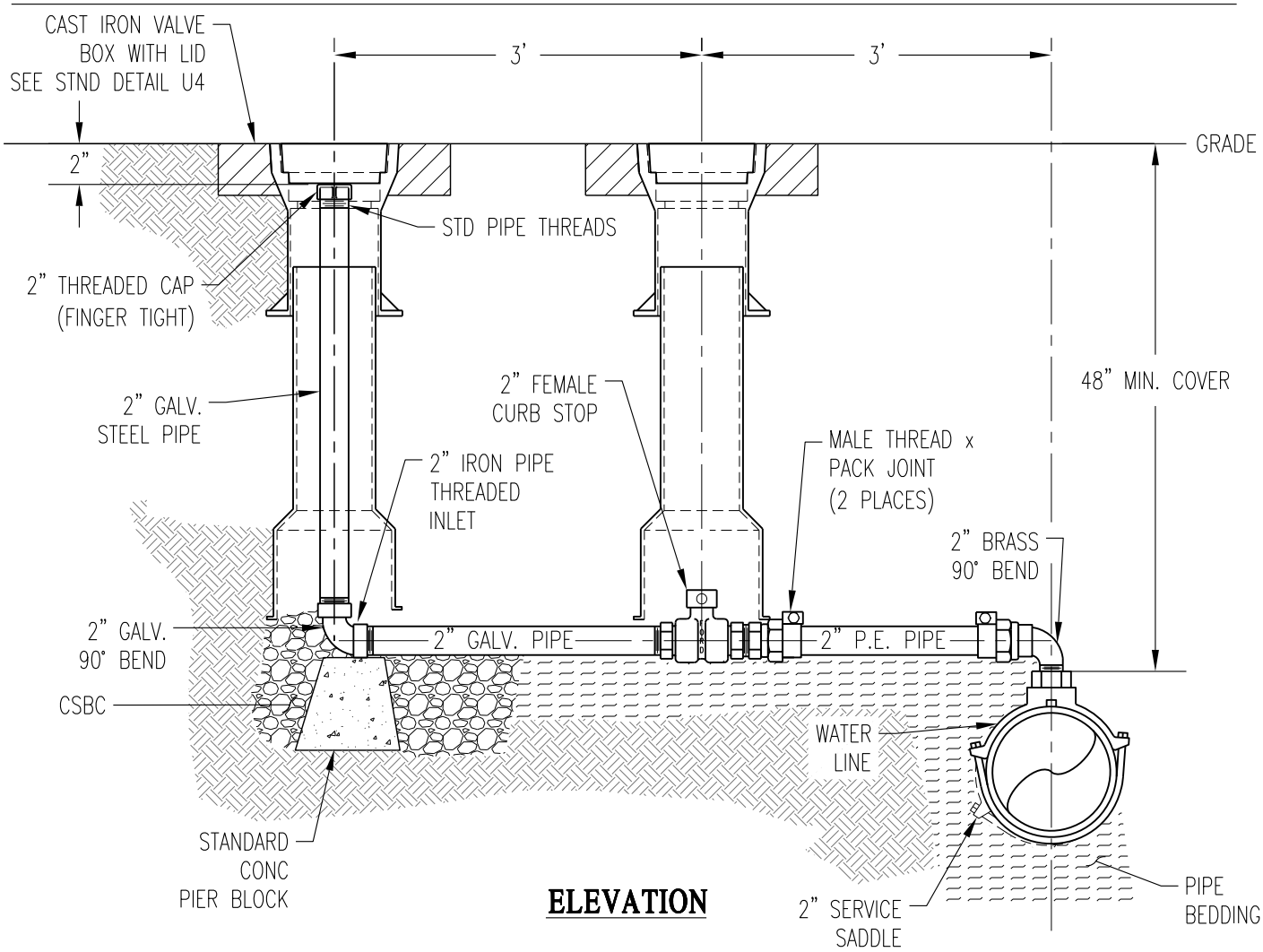

ELEVATION

TEMPORARY BLOW-OFF ASSEMBLY

PUBLIC WORKS ENGINEERING	
APPR. BY: PKR	DATE: 11.15
DRAWN BY: LD	DWG: W13A
CAD FILE: 2012_W13A_11_2015	

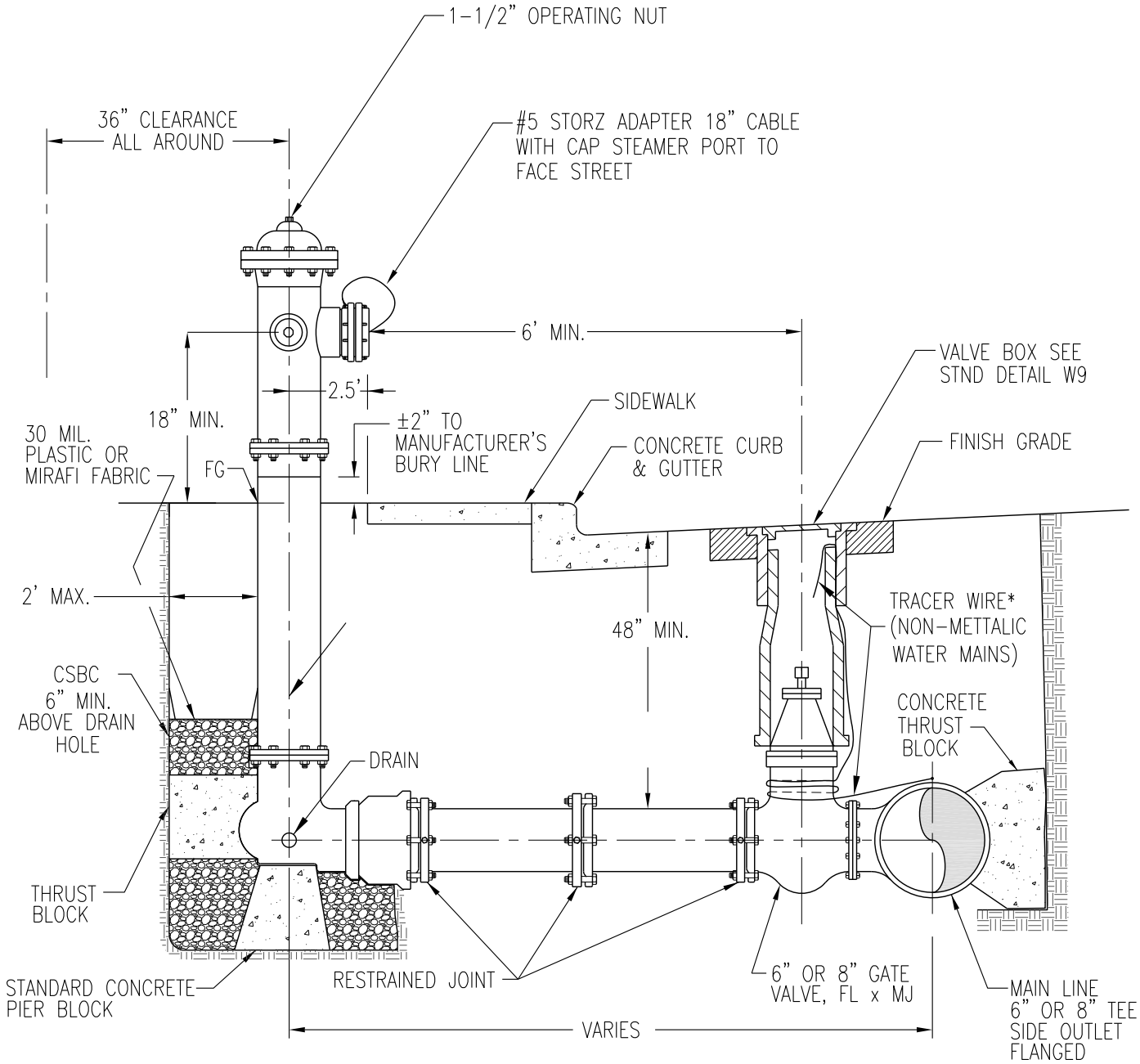

NOTES:

1. SEE STANDARD DETAIL W15 FOR BOLLARD POST REQUIREMENTS. CONTACT ENGINEER FOR PLACEMENT LOCATION. 5'x10' CONCRETE SIDEWALK TO BE PLACED AROUND HYDRANT AS DIRECTED BY ENGINEER.
2. IF FIRE HYDRANT IS MORE THAN 50' AWAY FROM THE WATER MAIN, INSTALL 8" LINE & VALVE WITH 8" X 6" REDUCER AT HYDRANT.
3. LOCATE FIRE HYDRANT 2' BEHIND CURB WHERE NO SIDEWALK IS PRESENT.
4. NO EXTENSIONS ALLOWED ON NEW INSTALLATIONS.
5. SEE STANDARD DETAIL W12 FOR TRACING WIRE INSTALLATION ON PVC MAIN LINES.

* STRIP INSULATION FROM LAST 12" OF THE WIRE AND BEND OVER LIP OF BOTTOM BOX.

Richland Washington

FIRE HYDRANT DETAIL

PUBLIC WORKS ENGINEERING	
APPR. BY: PKR	DATE: 03.2020
DRAWN BY: EY	DWG: W14
CAD FILE: 2014_W14_03_2020	

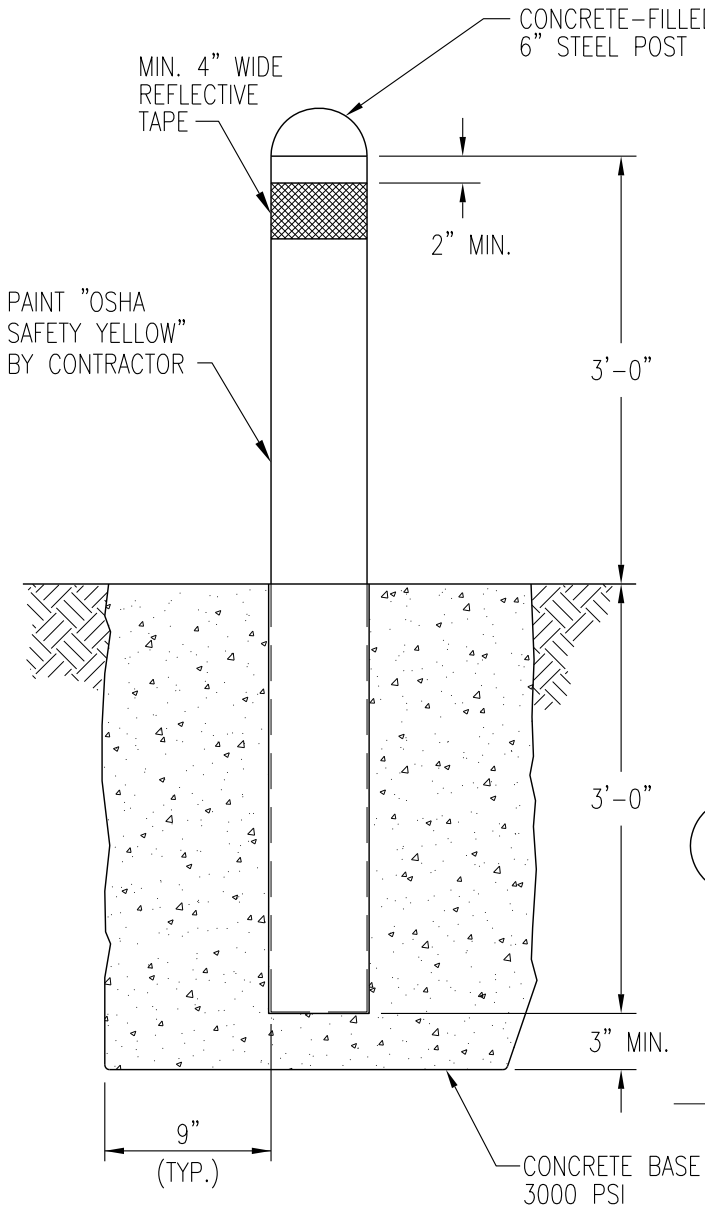

SECTION A-A

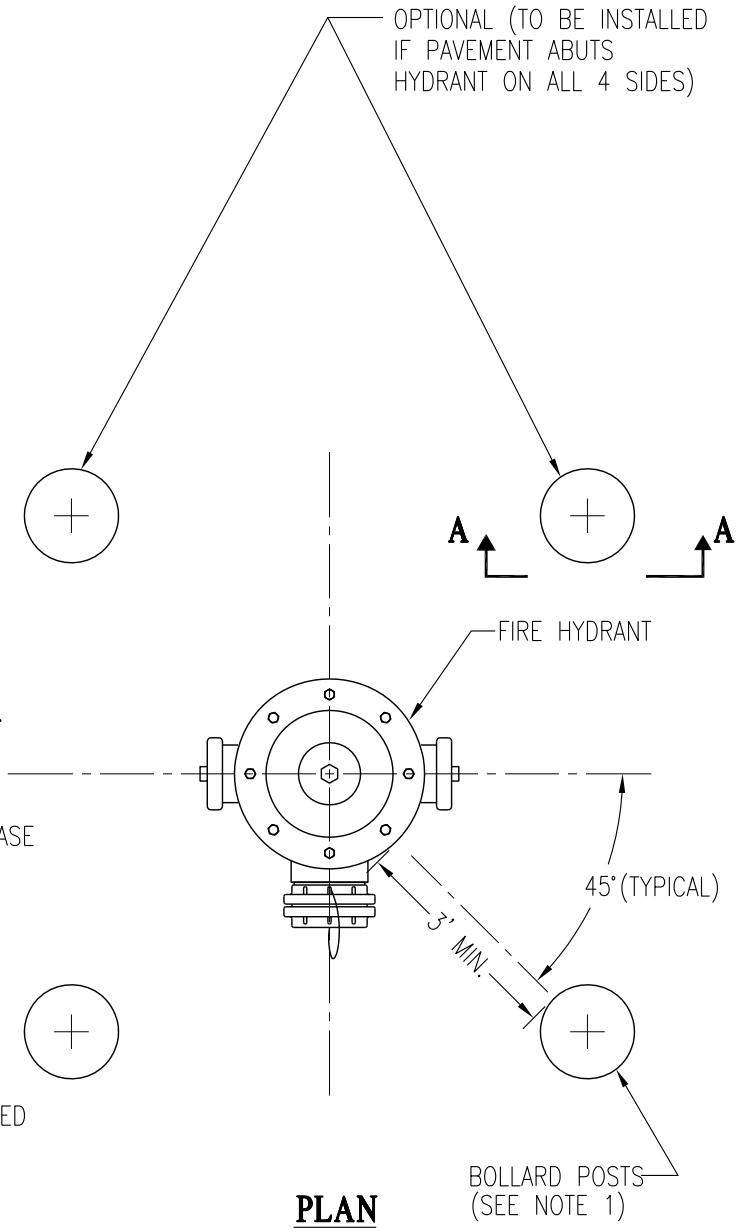

PLAN

NOTE:

1. WHERE CONCRETE CURBING IS NOT INSTALLED, BOLLARD POSTS (2 EA. MINIMUM) SHALL BE INSTALLED ON SIDE FACING PAVED SURFACE.

Richland Washington

BOLLARD POSTS

PUBLIC WORKS ENGINEERING	
APPR. BY: PKR	DATE: 12.2010
DRAWN BY: SC NYBY	DWG: W15
CAD FILE: 2012_W15_12_2010	

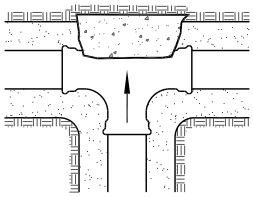

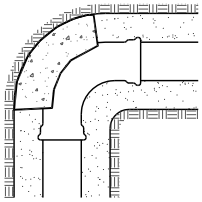

VERTICAL THRUST BLOCKS

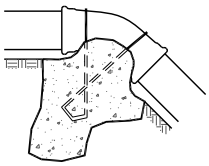

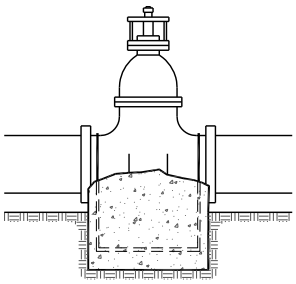

	HORIZONTAL THRUST BLOCKS				VERTICAL THRUST BLOCKS		
	MINIMUM BEARING AREA IN SQUARE FEET				MINIMUM VOLUME IN CUBIC YARDS		
Pipe Size in Inches	Tees, Wyes & Dead Ends	90° Bend	45° Bend	11 1/4° 22 1/2° Bend	45° Vertical Bend	11-1/4° 22-1/2° Vert. Bend	Restrained Valve
4 & Smaller	1.41	2.00	1.08	0.56	0.56	0.29	0.72
6	3.18	4.50	2.43	1.25	1.25	0.63	1.62
8	5.66	8.00	4.34	2.21	2.21	1.13	2.90
10	8.84	12.50	6.77	3.45	3.45	1.76	4.52
12	12.72	18.00	9.74	4.97	4.98	2.54	6.50
14	17.33	24.50	13.26	6.75	*	*	8.85
16	22.62	32.00	17.31	8.82	*	*	11.55
18	28.64	40.50	21.92	11.18	*	*	14.63
20	35.34	50.00	27.05	13.79	*	*	18.06
24	50.90	72.00	38.96	19.86	*	*	26.00

NOTES:

1. CONCRETE THRUST BLOCKING TO BE POURED AGAINST UNDISTURBED EARTH.
2. KEEP CONCRETE CLEAR OF JOINT AND ACCESSORIES.
3. ABOVE BEARING AREA & VOLUMES ARE CALCULATED AT A SOIL BEARING CAPACITY OF 2000 PSF & A TEST PRESSURE OF 225 PSI.
4. 6 MIL. PLASTIC TO BE PLACED BETWEEN THRUST BLOCK AND FITTINGS.
5. VALVES SHALL HAVE CONCRETE RESTRAINT BLOCKS AS SPECIFIED ABOVE UNLESS THE VALVE IS FLANGED TO A TEE, CROSS OR SIMILAR FITTING OR ANOTHER METHOD OF RESTRAINT IS PROVIDED.

*NO VERTICAL BENDS WITHOUT SPECIFIC APPROVAL BY THE ENGINEER.

Richland Washington

THRUST BLOCKING DETAILS

PUBLIC WORKS ENGINEERING	
APPR. BY: PKR	DATE: 03.2018
DRAWN BY: EY	DWG: W16-A
CAD FILE: 2012_W16_03_2018	

RESTRAINED PIPE LENGTH (FEET)

TEE BRANCH AND LENGTH EACH SIDE OF BEND

Pipe Size in Inches		TYPE OR FITTINGS					
		Tee Branch	90° Bend	45° Bend	22 1/2° Bend	11 1/4° Bend	Dead End Valve Or Plug & FH
Static Test Pressure (PSI)		150	150	150	150	150	150
6 INCH	PVC	60	27	11	5	3	65
	D.I.P.	46	23	10	5	2	49
8 INCH	PVC	81	34	14	7	3	84
	D.I.P.	61	30	12	6	3	63
12 INCH	PVC	118	48	20	10	5	120
	D.I.P.	88	42	18	8	4	90
16 INCH	D.I.P.	113	54	22	11	5	THRUST BLOCK
20 INCH	D.I.P.	137	64	26	13	6	
24 INCH	D.I.P.	161	74	30	15	7	
30 INCH	D.I.P.	149	87	36	17	9	
36 INCH	D.I.P.	223	100	41	20	10	

CALCULATIONS ARE BASED ON INSTALLATION IN POORLY GRADED SANDS, GRAVEL AND GRAVEL-SAND MIXTURES (GM&SM). TYPE 3 TRENCH - PIPE BEDDED IN SELECT NATIVE, OR IMPORTED EARTH BEDDING, TO A DEPTH OF 6 INCHES OVER THE PIPE, SEE STANDARD DETAIL U2, A MINIMUM 3 FEET OF COMPACTED PIPE BURY AT THE TIME OF THE PRESSURE TEST AND A SAFETY FACTOR OF 1.5:1 TO ALLOW FOR SITE CONDITION VARIABLES.

NOTES:

1. FOR DESIGN FORMULAS, CALCULATIONS AND ADDITIONAL INFORMATION, THE TABLE IS BASED ON THE RESTRANT CALCULATIONS FOUND AT WWW.ROMAC/RESTRAINT/INDEX.HTM. THE RESTRAINED PIPE LENGTH APPLIES TO CONDITIONS WHERE A CONCRETE THRUST BLOCK IS NOT USED.

2. IF POLYETHYLENE WRAPPED D.I.P. IS SPECIFIED, INDEPENDENT CALCULATIONS ARE REQUIRED. DO NOT USE THE ABOVE TABLE.

3. EVERY JOINT WITHIN THE DESIGNATED RESTRAINT LENGTH MUST BE RESTRAINED, IF THE REQUIRED RESTRAINT LENGTH IS SHORTER THAN A SINGLE SECTION OF PIPE BEING USED, ONLY THE FITTING CONNECTION REQUIRES RESTRAINT.

4. THRUST BLOCKS ARE REQUIRED FOR ALL CONNECTIONS TO AC PIPE AND WHEN AN AC PIPE CONNECTION IS LOCATED ANYWHERE WITHIN THE DESIGNATED RESTRAINT LENGTH.

5. THRUST BLOCKS ARE REQUIRED IF THE DESIGNATED RESTRAINT LENGTH CANNOT BE OBTAINED, SPECIAL ATTENTION NEEDS TO BE GIVEN TO DEAD END STUBS AND FIRE HYDRANT INSTALLATIONS. IF THE LENGTH OF THE FEEDER PIPE, FROM THE MAIN LINE TEE TO THE END CAP, OR HYDRANT, IS LESS THAN THE DESIGNATED DEAD END RESTRAINT LENGTH, THRUST BLOCKS ARE REQUIRED AT BOTH THE TEE AND AT THE END CAP, OR HYDRANT. WHEN THE SPECIFIED CONDITIONS ALLOW THE USE OF MECHANICAL RESTRAINTS, THE RESTRAINT LENGTH REQUIREMENTS FOR BOTH THE TEE AND THE END CAP, OR HYDRANT MUST BE MET.

6. APPROVED TYPES OF RESTRAINED PIPE SHALL BE: SEE MATERIAL LIST.

Richland Washington

MECHANICAL RESTRAINT

PUBLIC WORKS ENGINEERING	
APPR. BY: PKR	DATE: 03.2018
DRAWN BY: EY	DWG: W16-B
CAD FILE: 2017_W16B_03_2018	

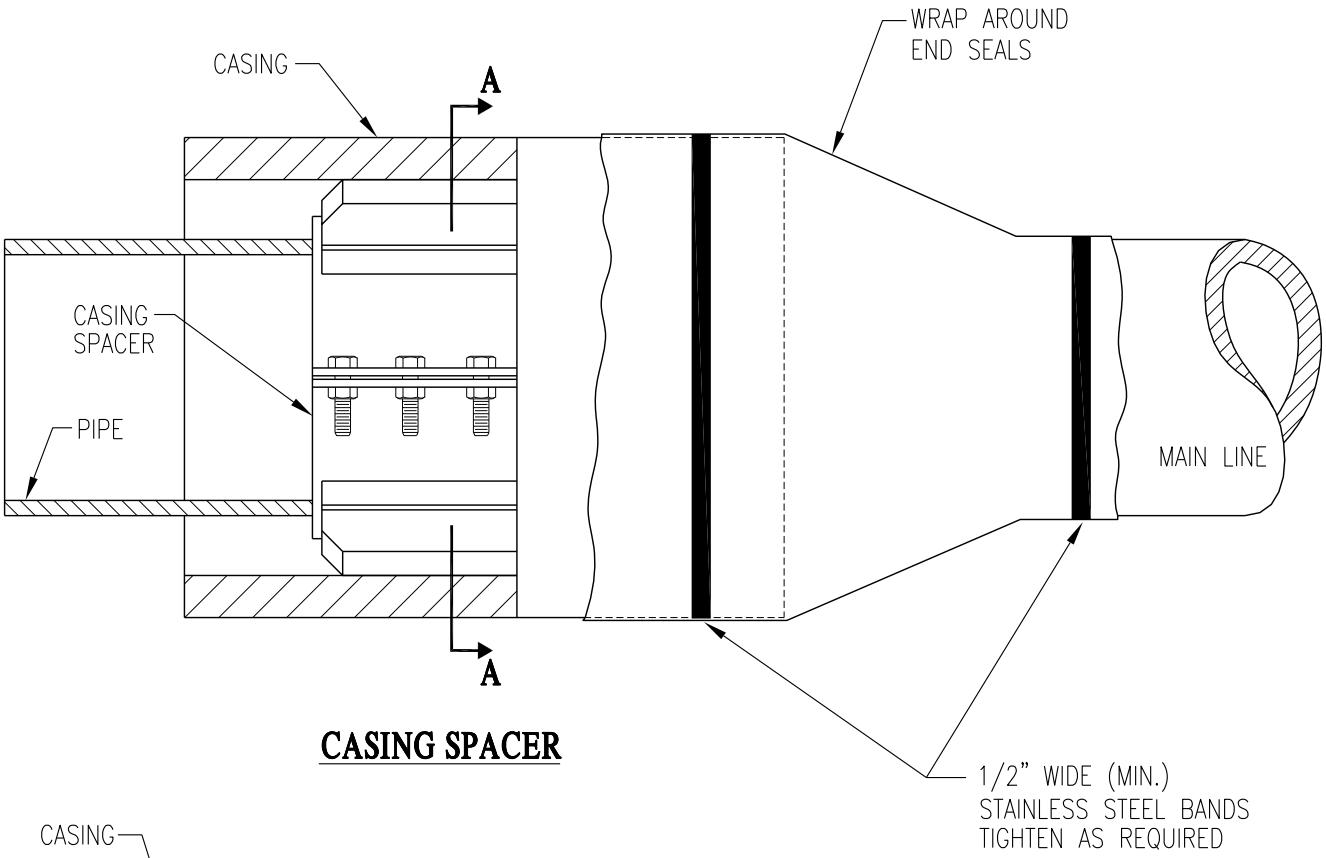

CASING SPACER

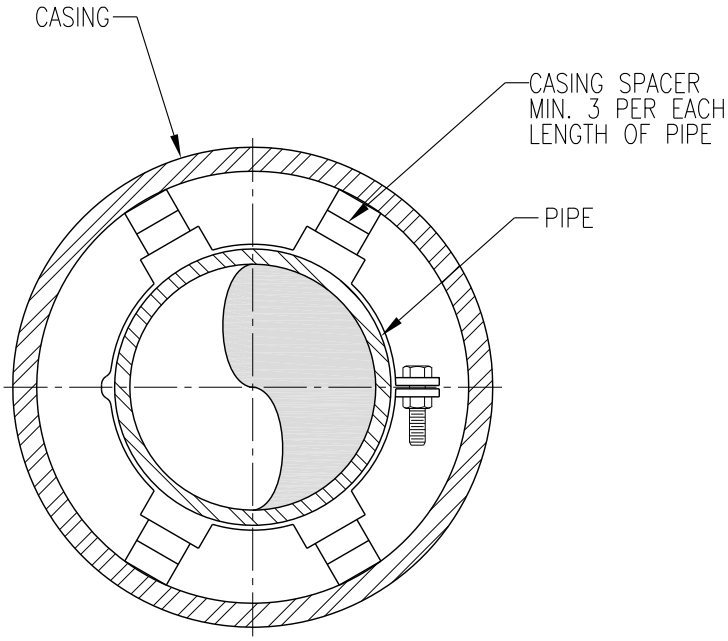

SECTION A-A

NOTES:

1. CASING SPACERS SHALL BE MANUFACTURED GALVANIZED OR STAINLESS STEEL, SIZED FOR THE TYPE OF PIPE & CASING SIZE PER THE MANUFACTURERS RECOMMENDATION.
2. CASING TO BE SIZED TO PROVIDE MINIMUM 2" CLEARANCE FOR THE TYPE OF JOINT APPROVED BY THE CITY ENGINEER.
3. PIPE JOINTS WITHIN CASING TO BE RESTRAINED JOINT AS APPROVED BY THE CITY ENGINEER.
4. FOR PIPES 12" & SMALLER, 2 SPACERS PER JOINT OF 13' SEWER, 4 SPACERS PER JOINT OF 18' OR 20' WATER.
5. MINIMUM 3/8" THICK STEEL CASINGS MAY BE REQUIRED BY THE RAILROAD OR IRRIGATION UTILITY.

Richland Washington

CASING SPACER

PUBLIC WORKS ENGINEERING	
APPR. BY: PKR	DATE: 12.2010
DRAWN BY: SC NYBY	DWG: W17
CAD FILE: 2012_W17_12_2010	

BUILDER IS RESPONSIBLE FOR THE WATER SERVICE IF DAMAGED - A $300.00 MINIMUM FEE WILL BE CHARGED. * ADDITIONAL FEES MAY BE CHARGED FOR EXTENSIVE DAMAGE OVER $300.00.

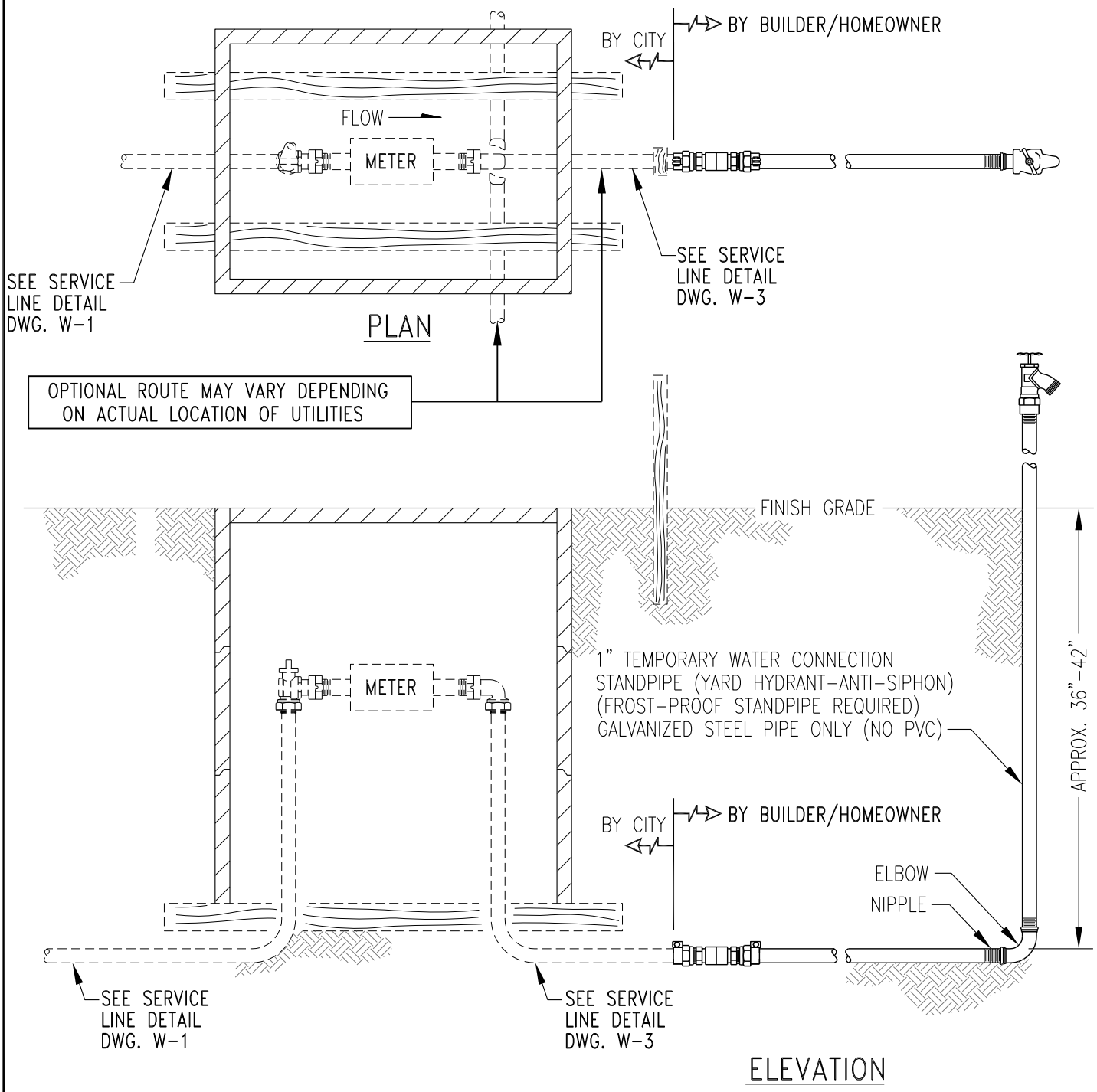

Richland Washington	WATER SERVICE CONNECTION FOR NEW RESIDENTIAL LOT	PUBLIC WORKS ENGINEERING
		APPR. BY: PKR — DATE: 03.2012
		DRAWN BY: SC NYBY — DWG: W18
		CAD FILE: 2012_W18_03_2012

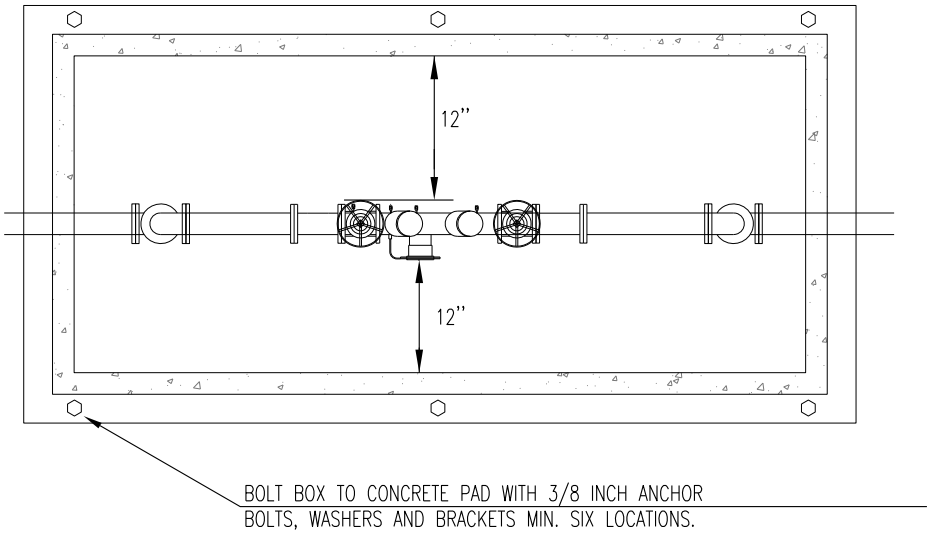

TOP VIEW

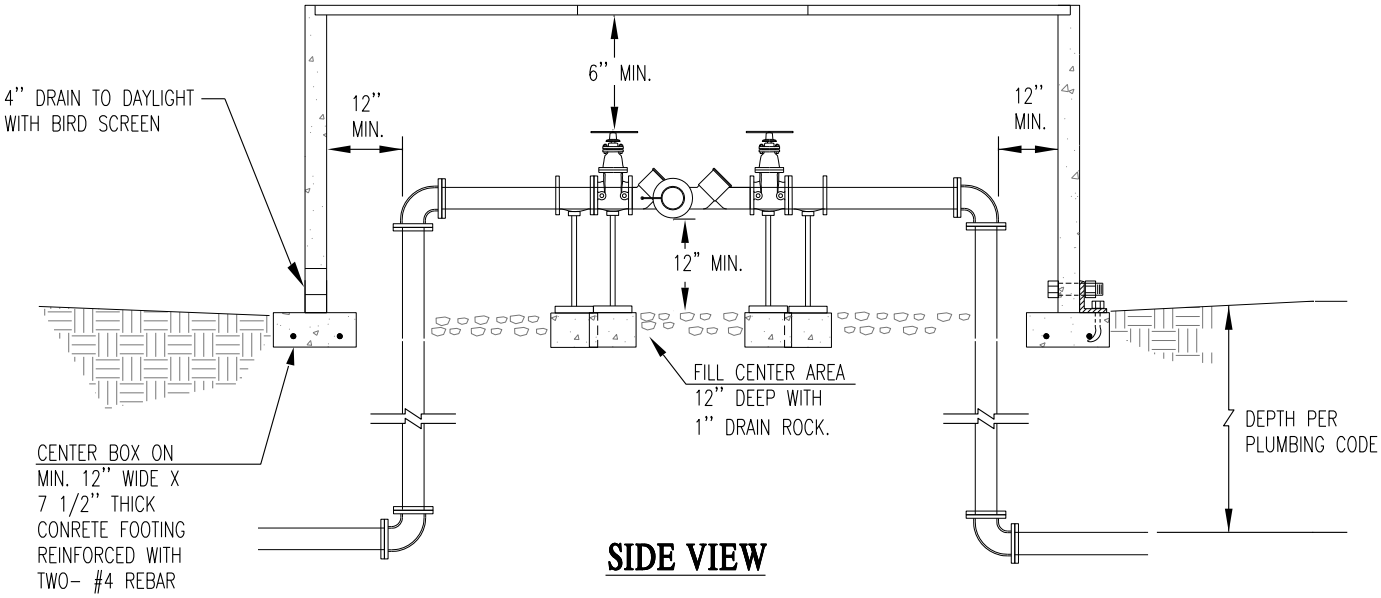

SIDE VIEW

NOTES:

1. MUST BE ON THE LATEST WASHINGTON DEPARTMENT OF HEALTH APPROVED LIST OF BACKFLOW PREVENTION ASSEMBLIES.
2. MUST BE INSTALLED ABOVE GROUND MINIMUM 12 INCHES.
3. MUST BE PROTECTED FROM FREEZING CONDITIONS. INSTALL HEAT TAPE FOR FREEZE PROTECTION.
4. DO NOT INSTALL IN AN AREA SUBJECT TO FLOODING.
5. THE BACKFLOW DEVICE SHALL BE TESTED UPON INSTALLATION BY A QUALITIFED BACKFLOW ASSEMBLY TESTER (B.A.T.) AND TEST RESULTS SENT TO THE CITY OF RICHLAND WATER QUALITY COORDINATOR, THEN RETESTED ANNUALLY THEREAFTER.
6. OWNER SHALL FURNISH, INSTALL AND MAINTAIN THE BACKFLOW DEVICE AND ALL PIPING AND APPURTENANCES SHOWN ON THIS PLAN.
7. THE BACKFLOW DEVICE SHALL BE INSTALLED DIRECTLY DOWNSTREAM OF THE CITY WATER METER.
8. THE BACKFLOW DEVICE SHALL ONLY BE INSTALLED IN THE ORIENTATION FOR WHICH THEY ARE APPROVED.

Richland Washington

REDUCED PRESSURE BACKFLOW ASSEMBLY DEVICES 2"AND SMALLER

PUBLIC WORKS ENGINEERING	
APPR. BY: PKR	DATE: 09.13
DRAWN BY: LD	DWG: W19
CAD FILE: 2013_W19_09_2013	

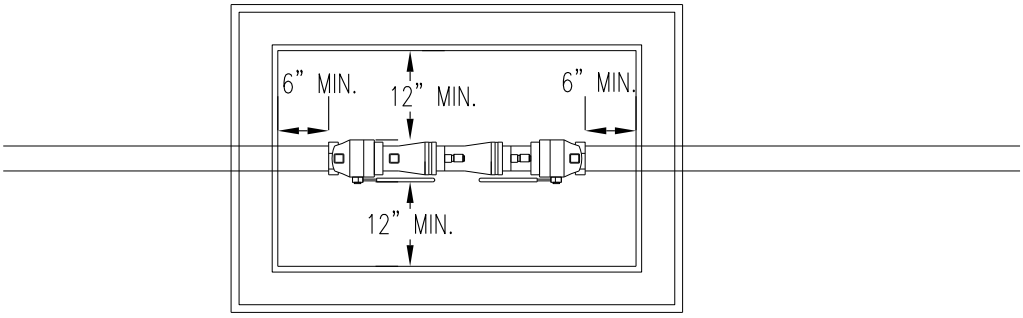

PLAN VIEW

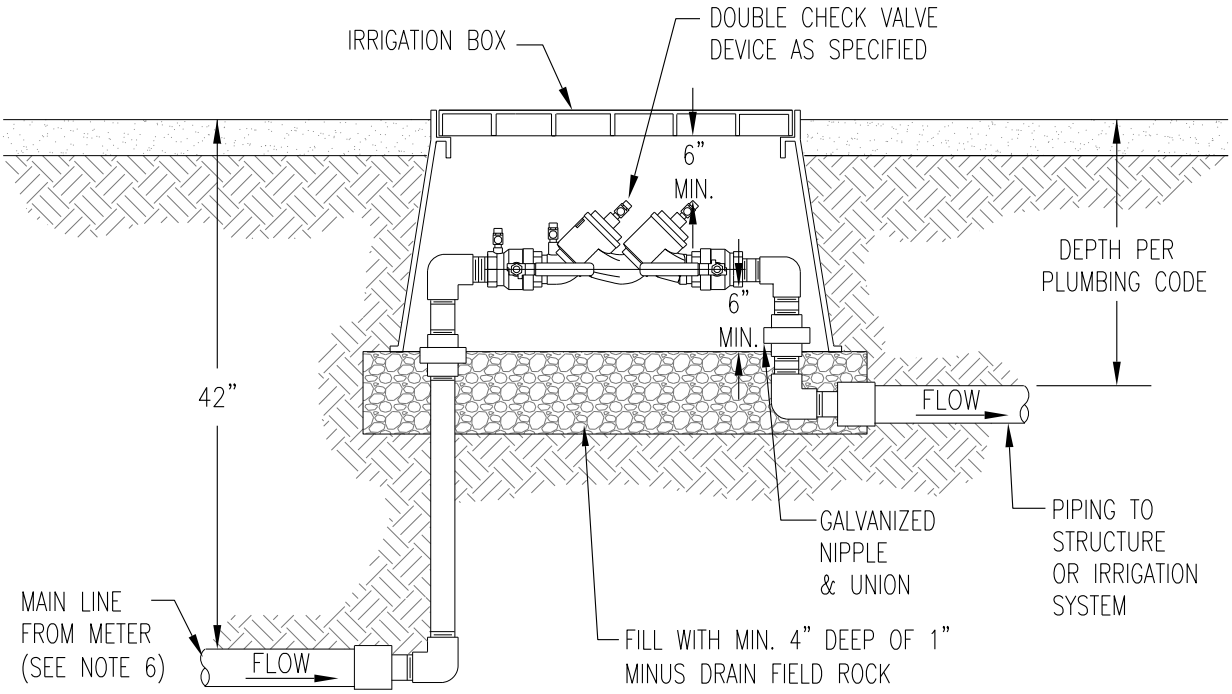

SIDE VIEW

NOTES:

1. MUST BE ON THE LATEST WASHINGTON STATE DEPARTMENT OF HEALTH APPROVED LIST OF BACKFLOW PREVENTION ASSEMBLIES.
2. MAY BE INSTALLED BELOW GROUND IN APPROVED VAULT.
3. THE BACKFLOW DEVICE SHALL BE TESTED UPON INSTALLATION BY A QUALIFIED BACKFLOW ASSEMBLY TESTER (B.A.T.) AND TEST RESULTS SENT TO THE CITY OF RICHLAND WATER QUALITY COORDINATOR, AND THEN RETESTED ANNUALLY THEREAFTER.
4. FREEZE PROTECTION IS THE RESPONSIBILITY OF THE OWNER.
5. RISERS AND ALL PIPE IN BOX TO BE GALVANIZED.
6. THE BACKFLOW DEVICE SHALL BE INSTALLED DIRECTLY DOWNSTREAM OF THE CITY WATER METER.
7. THE BACKFLOW DEVICE SHALL ONLY BE INSTALLED IN THE ORIENTATION FOR WHICH THEY ARE APPROVED.
8. OWNER SHALL FURNISH, INSTALL AND MAINTAIN THE BACKFLOW DEVICE, ALL PIPING AND APPURTENANCES SHOWN ON THIS PLAN.

Richland Washington

DOUBLE CHECK VALVE ASSEMBLY DEVICES 2" OR SMALLER

PUBLIC WORKS ENGINEERING	
APPR. BY: PKR	DATE: 09.13
DRAWN BY: LD	DWG: W20
CAD FILE: 2013_W20_09_2013	

Standard Details
Utilities

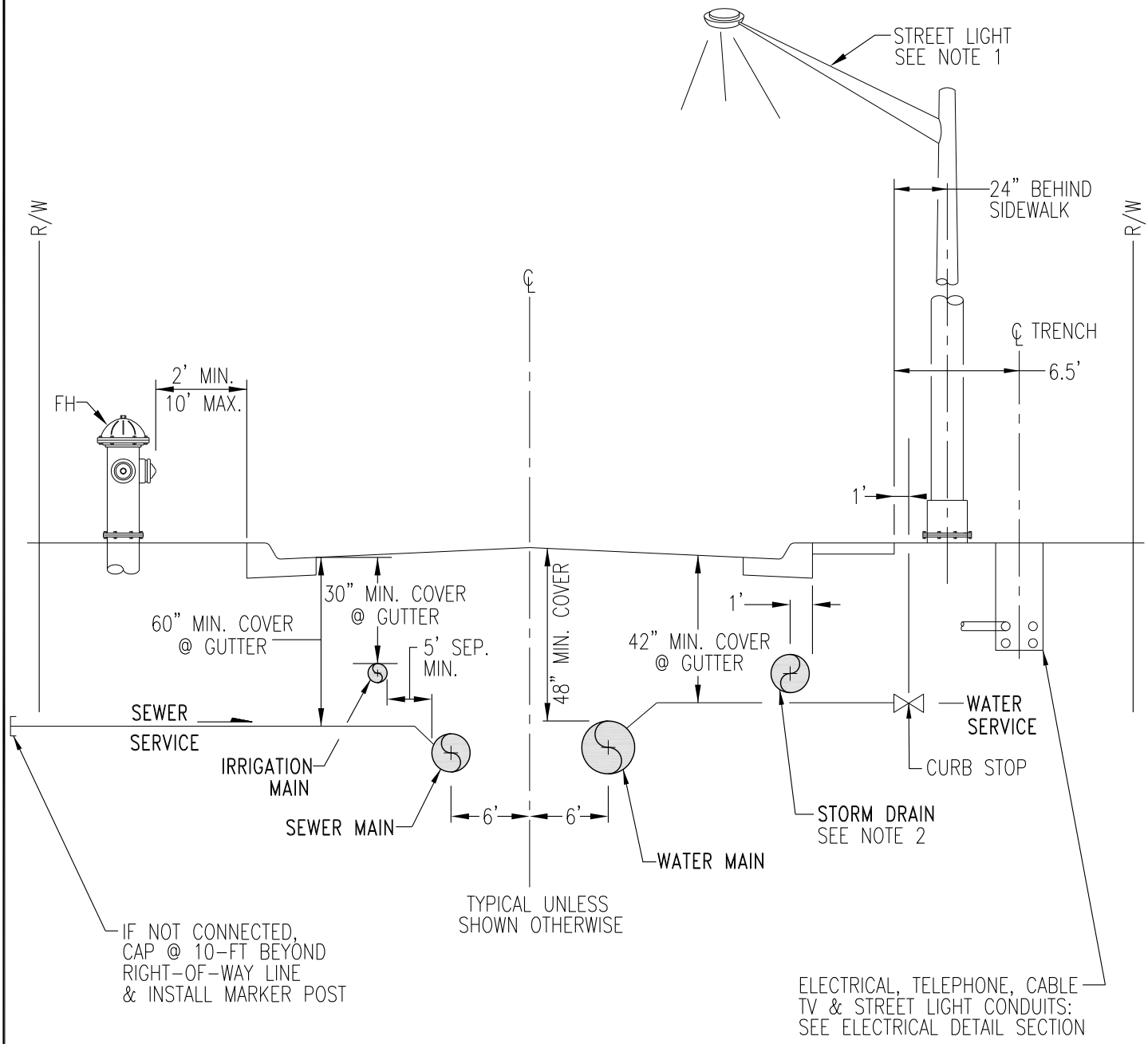

NOTES:

1. IF NO CURB AND GUTTER LIGHT POLE MUST BE A MINIMUM OF 12' FROM EDGE OF ROAD.

2. STORM LINE MAY BE INSTALLED 5' MINIMUM FROM THE WATER OR SEWER LINES ON EITHER SIDE OF THE STREET. PLANS SHALL BE SUBMITTED FOR APPROVAL BY CITY ENGINEER OR HIS REPRESENTATIVE.

Richland Washington	UTILITY PLAN TYPICAL SECTION	PUBLIC WORKS ENGINEERING
		APPR. BY: PKR — DATE: 12.2010
		DRAWN BY: LD — DWG: U1
		CAD FILE: 2012_U1_12_2010

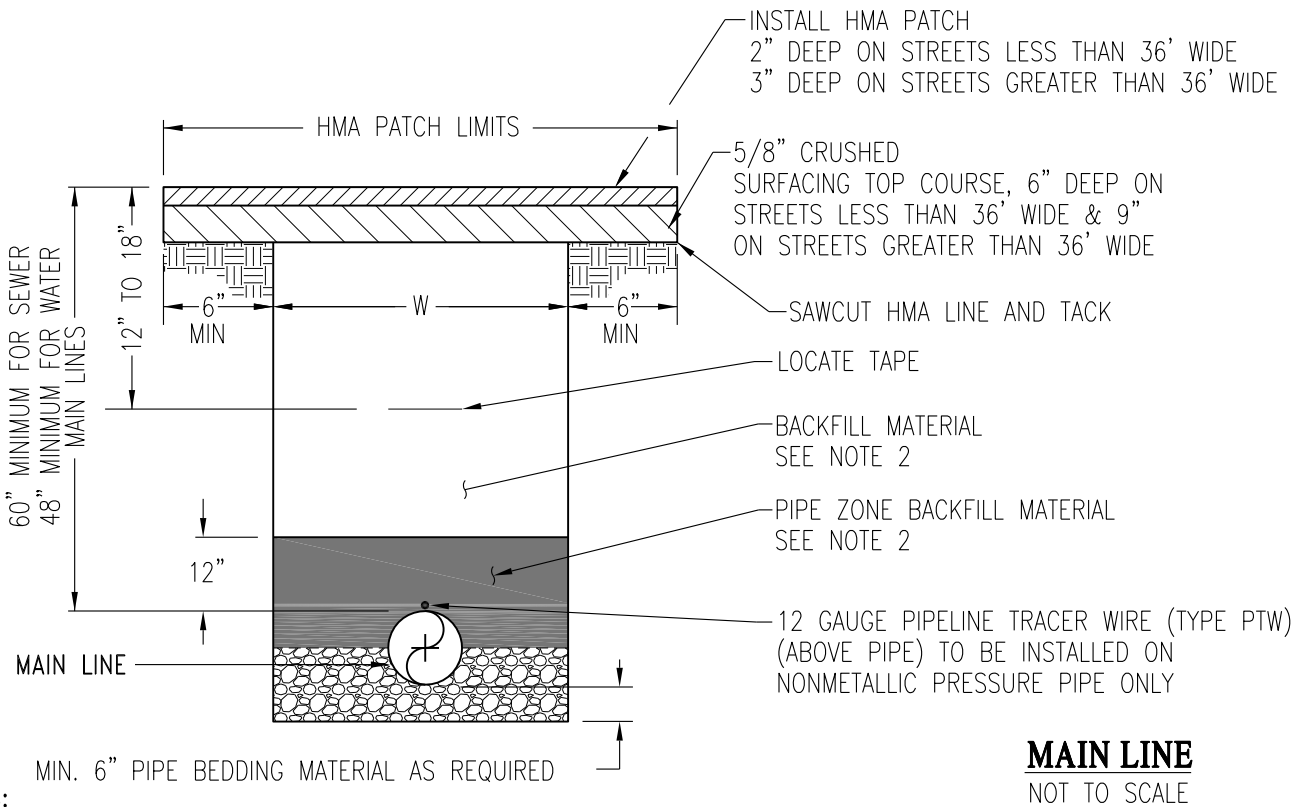

MAIN LINE
NOT TO SCALE

NOTES:

1. TRENCH WIDTH "W" SHALL BE 40" MINIMUM FOR 15" DIAMETER AND SMALLER PIPES AND 1 1/2 TIMES THE INSIDE DIAMETER PLUS 18" MINIMUM FOR 18" AND LARGER PIPES.
2. 5/8" CRUSHED SURFACING TOP COURSE BACKFILL MATERIAL REQUIRED ON SMALL TRENCH REPAIR UTILITY PROJECTS, UNLESS DIRECTED OTHERWISE BY THE ENGINEER. FOR CITY OF RICHLAND CAPITAL IMPROVEMENT PROJECTS AND SUBDIVISIONS SECTION 7-08 OF THE WSDOT STANDARD SPECIFICATIONS SHALL APPLY.

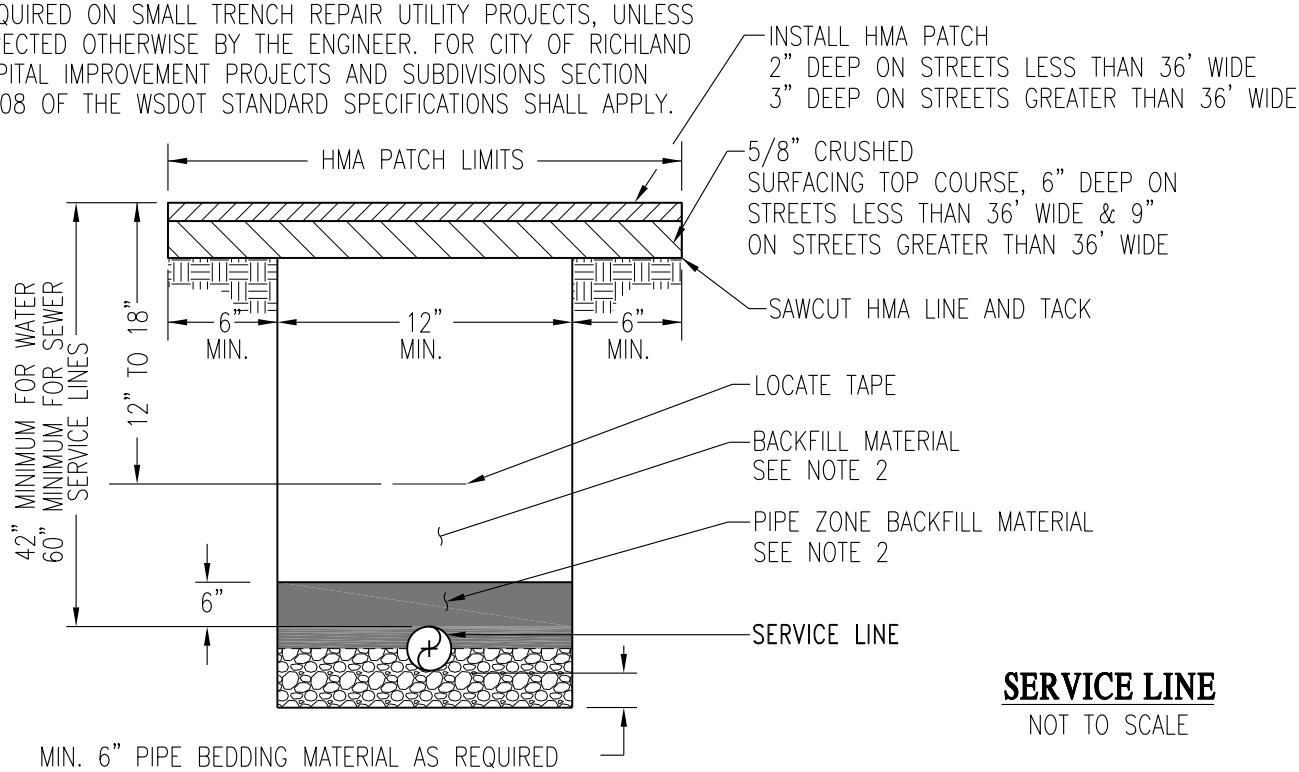

SERVICE LINE
NOT TO SCALE

Richland Washington

TRENCH DETAIL

PUBLIC WORKS ENGINEERING	
APPR. BY: PKR	DATE: 05.14
DRAWN BY: LD	DWG: U2
CAD FILE: 2014_U2_05_2014	

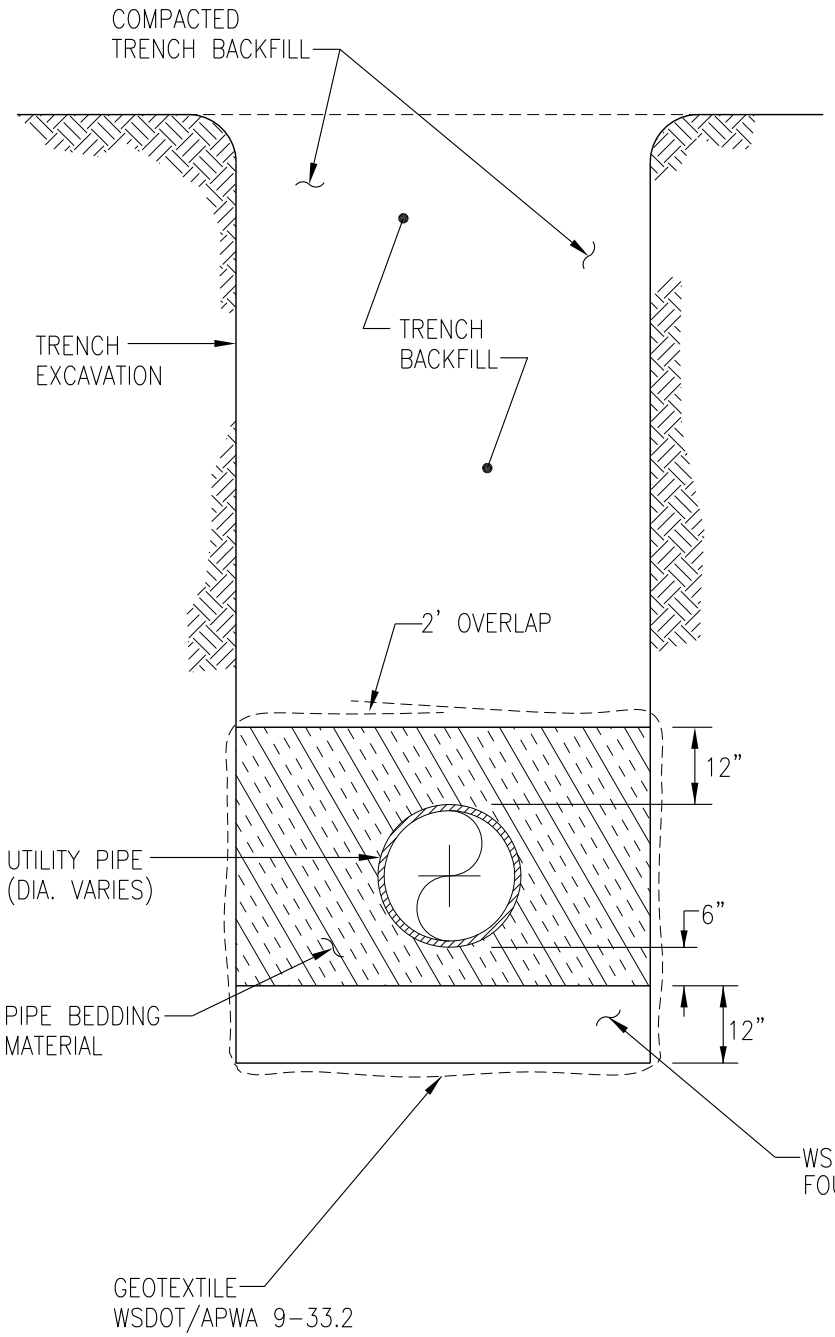

THE ON-SITE SOILS MAY BE USED FOR COMPACTED TRENCH BACKFILL.

PIPE BEDDING MATERIAL SHALL CONFORM TO THE WSDOT/APWA STANDARD SPECIFICATIONS 9-03.9(3) TOP COURSE

ALL PIPE BEDDING SHOULD BE WRAPPED IN A NON-WOVEN GEOTEXTILE FABRIC. THE GEOTEXTILE SHALL HAVE A NOMINAL WEIGHT OF AT LEAST 6 OUNCES PER SQUARE YARD. THE GEOTEXTILE SHALL EXTEND ACROSS THE BOTTOM OF THE TRENCH, UP THE SIDES OF THE TRENCH, AND SHALL OVERLAP AT LEAST 2 FEET ON THE TOP OF THE TRENCH.

Richland Washington

GROUND WATER TRENCH DETAIL

PUBLIC WORKS ENGINEERING	
APPR. BY: PKR	DATE: 12.2010
DRAWN BY: LD	DWG: U3
CAD FILE: 2012_U3_12_2010	

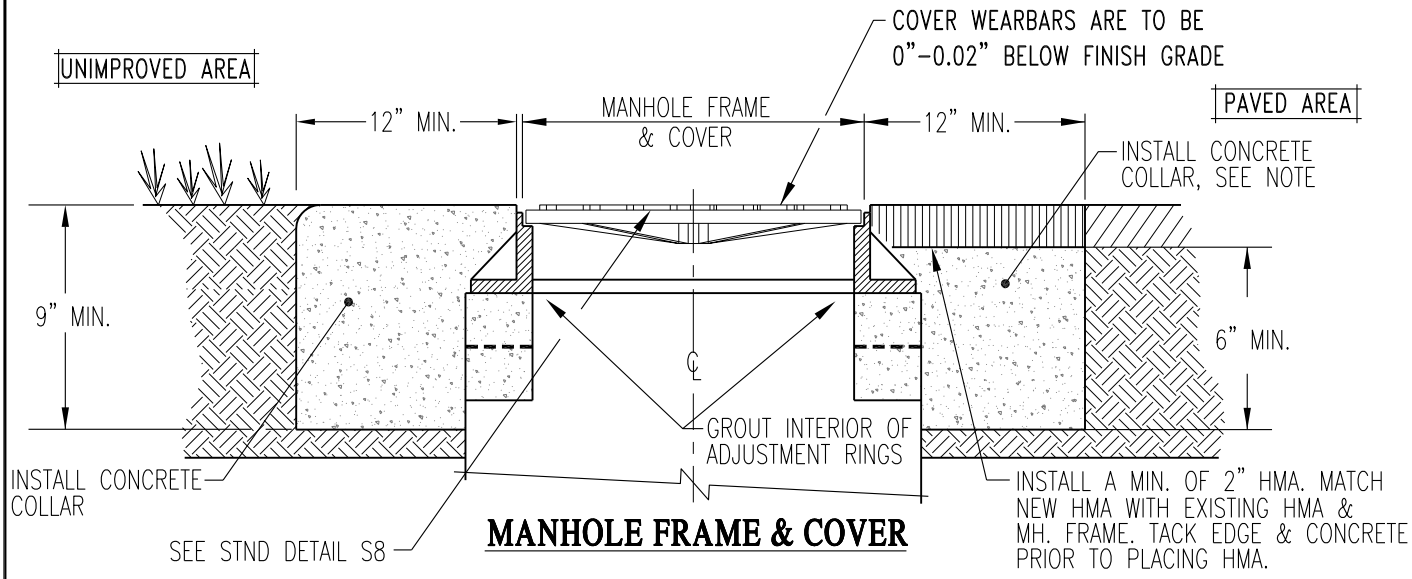

MANHOLE FRAME & COVER

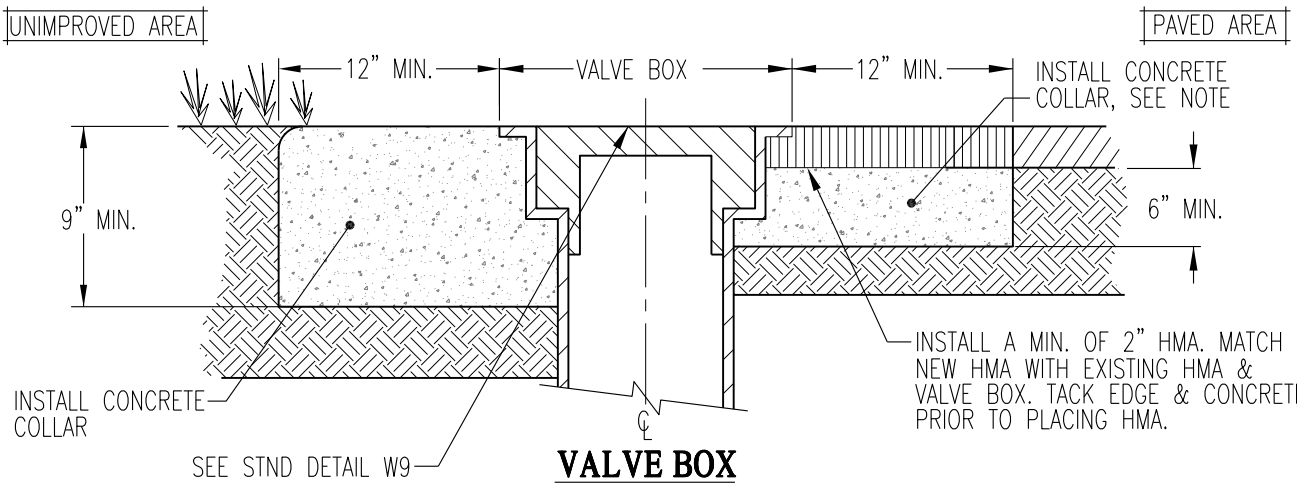

VALVE BOX

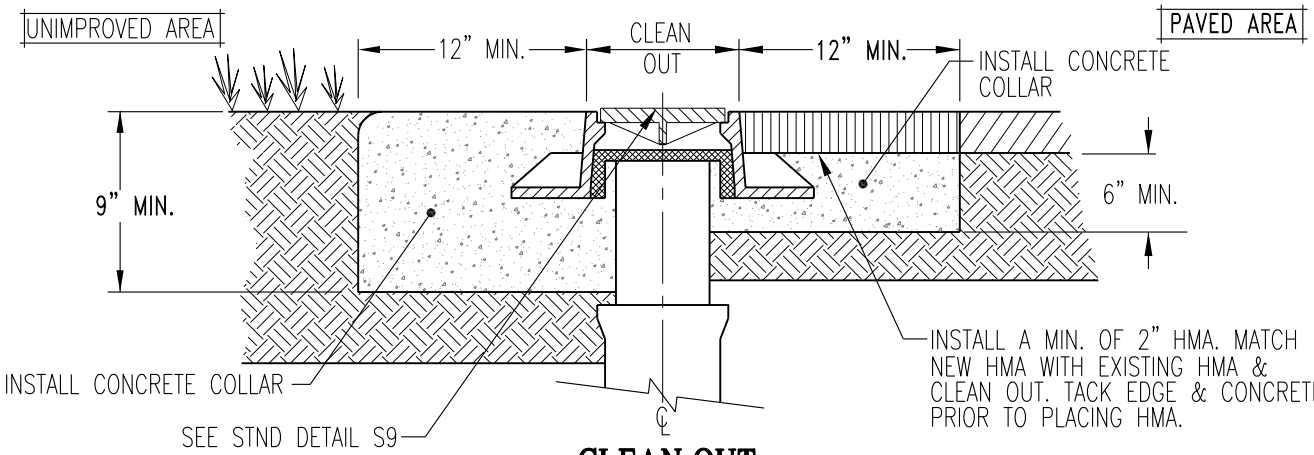

CLEAN-OUT

NOTE:

A CIRCULAR OR SQUARE SHAPED CONCRETE COLLAR IS REQUIRED ON ALL INSTALLATIONS. CONCRETE COLLAR SHALL EXTEND A MINIMUM OF 3" BELOW TOP SECTION OF MANHOLE FRAME, COVERING ALL ADJUSTMENT RINGS.

Richland Washington

UTILITY ADJUSTMENTS

PUBLIC WORKS ENGINEERING	
APPR. BY: PKR	DATE: 11.15
DRAWN BY: LD	DWG: U4
CAD FILE: 2012_U4_11_2015	

Standard Details
Streets

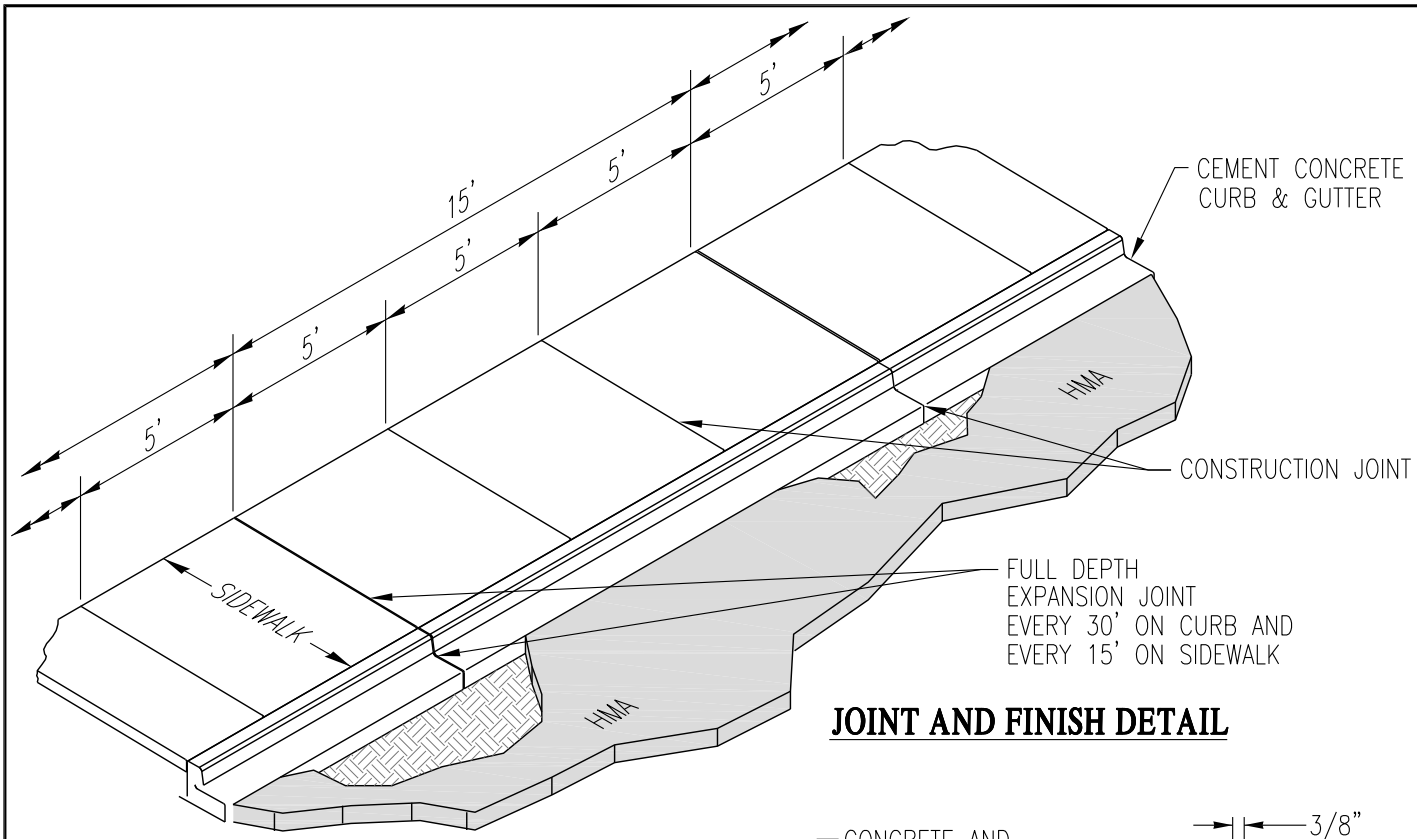

JOINT AND FINISH DETAIL

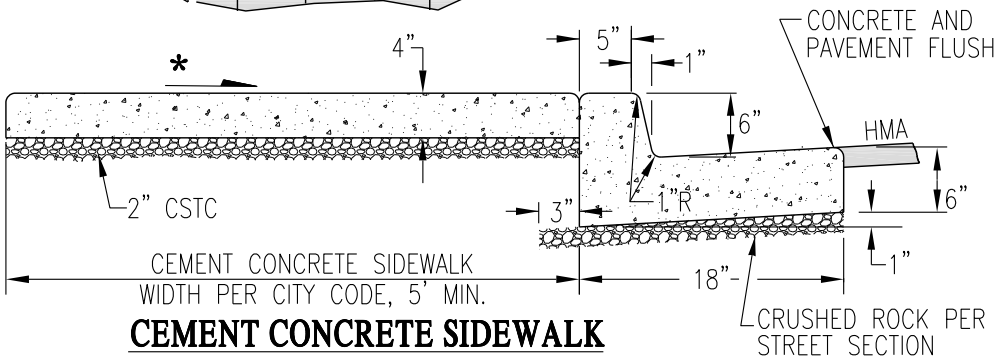

CEMENT CONCRETE SIDEWALK

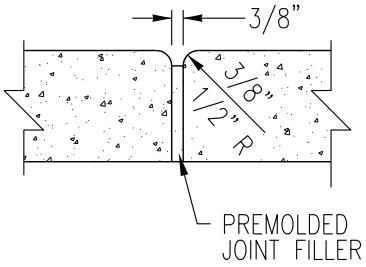

EXPANSION JOINT

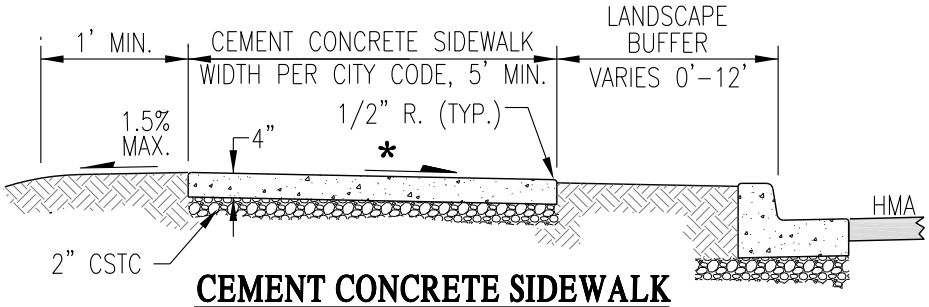

CEMENT CONCRETE SIDEWALK

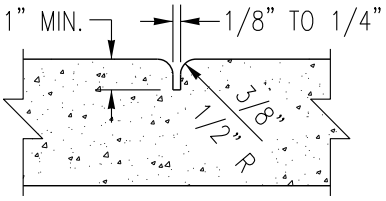

CONSTRUCTION JOINT

LEGEND:

SLOPE IN EITHER DIRECTION

* 1.5% OR FLATTER RECOMMENDED FOR DESIGN/FORMWORK (2% MAX)

NOTES:

1. SEE STANDARD DETAIL ST7 FOR CURB, GUTTER AND SIDEWALK NOTES.
2. INSTALL 3/8" FULL EXPANSION JOINTS IN CURB AT ALL PC'S, PT'S AND CURB RETURNS.
3. ALL FILETS 1/2" UNLESS OTHERWISE NOTED.
4. FINISHED GRADE ADJACENT TO SIDEWALK OR CURB SHALL BE 1" BELOW TOP OF CONCRETE SURFACE.

Richland Washington

CURB, GUTTER & SIDEWALK

PUBLIC WORKS ENGINEERING	
APPR. BY: PKR	DATE: 05.18
DRAWN BY: EY	DWG: ST1
CAD FILE: 2013_ST1_05_2018	

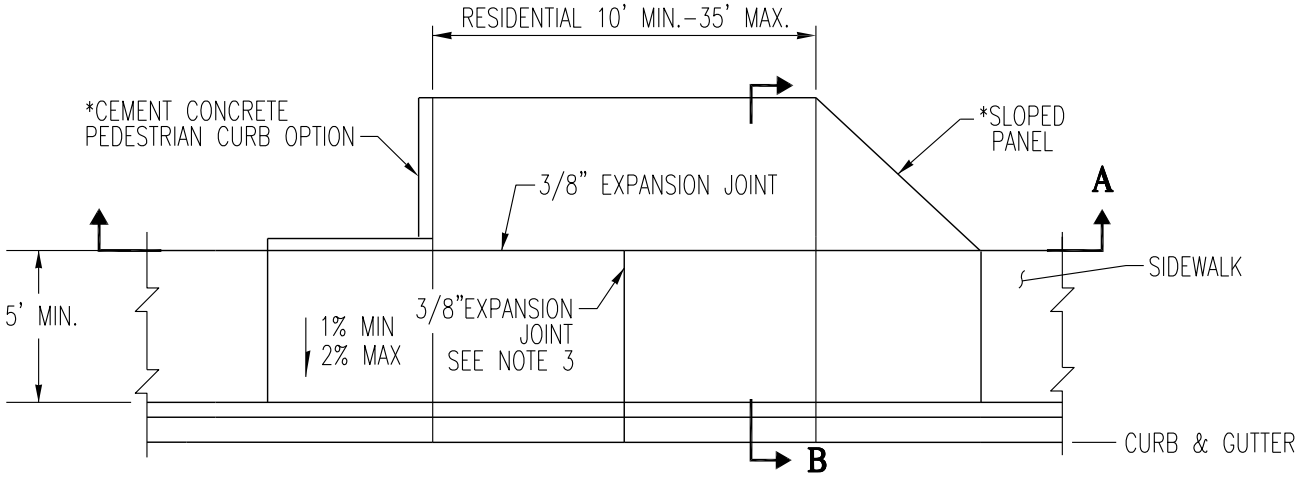

CEMENT CONCRETE DRIVEWAY

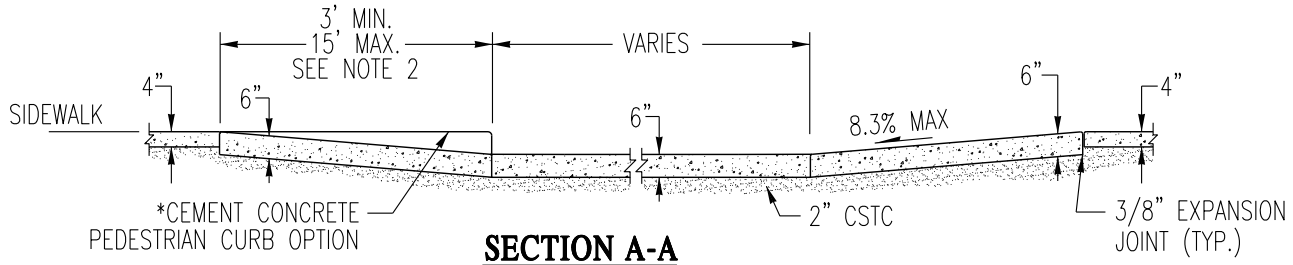

SECTION A-A

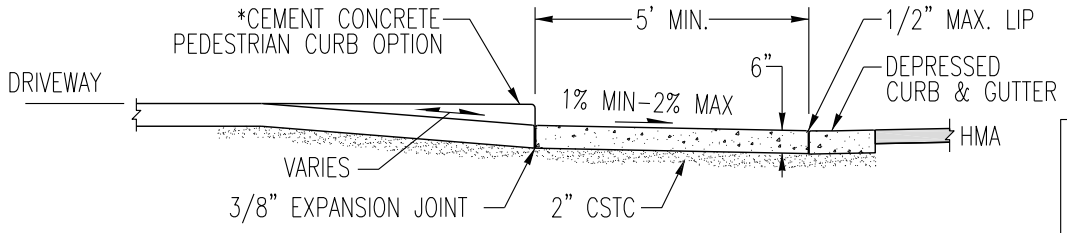

SECTION B-B

*NOTE:
OPTION USED WILL BE DETERMINED BY CITY ENGINEER; DEPENDENT UPON FIELD CONDITIONS.

LEGEND: SLOPE IN EITHER DIRECTION

NOTES:

1. SEE STANDARD DETAIL ST7 FOR CURB, GUTTER AND SIDEWALK NOTES.
2. THE CURB RAMP MAXIMUM RUNNING SLOPE SHALL NOT REQUIRE THE RAMP LENGTH TO EXCEED 15' TO AVOID CHASING THE SLOPE INDEFINITELY WHEN CONNECTING TO STEEP GRADES.
3. WHEN THE DRIVEWAY WIDTH EXCEEDS 15', CONSTRUCT A FULL DEPTH EXPANSION JOINT WITH 3/8" JOINT FILLER ALONG THE DRIVEWAY CENTERLINE. CONSTRUCT EXPANSION JOINTS PARALLEL WITH THE CENTERLINE AS REQUIRED AT 15' MAXIMUM SPACING WHEN DRIVEWAY WIDTHS EXCEED 30'.
4. SEE RMC 12.04.090 AND 12.04.120 FOR ADDITIONAL DETAILS

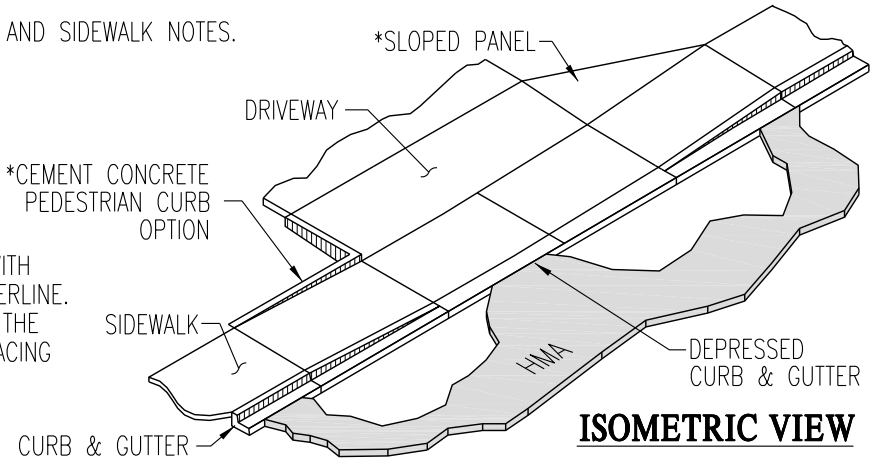

ISOMETRIC VIEW

Richland Washington

STANDARD RESIDENTIAL DRIVEWAY (TYPE 1)

PUBLIC WORKS ENGINEERING	
APPR. BY: PKR	DATE: 06.19
DRAWN BY: EY	DWG: ST2
CAD FILE: 2013_ST2_06_2019	

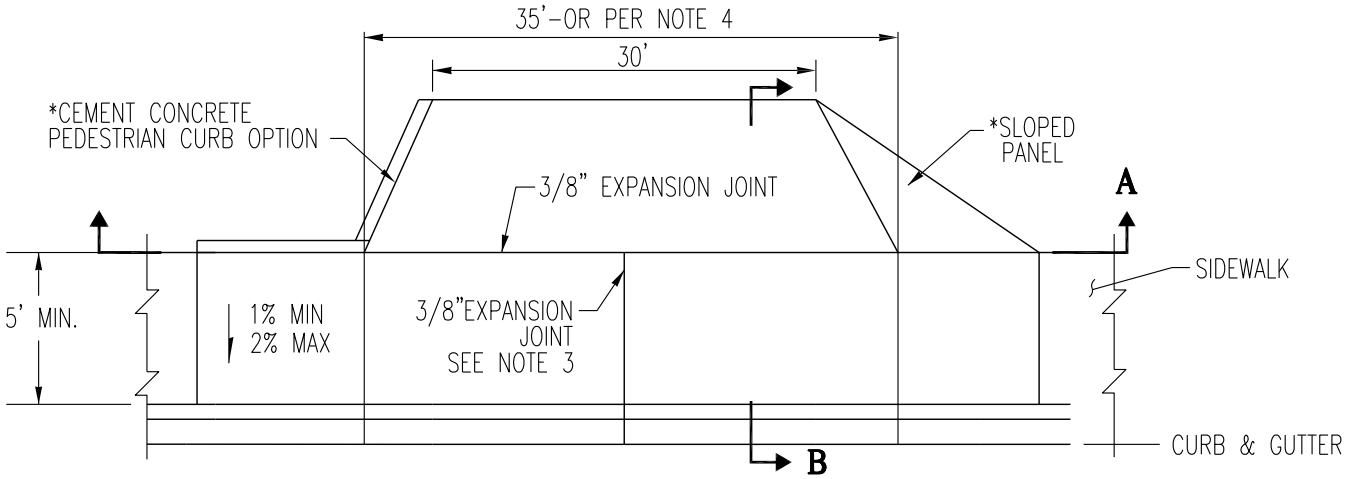

CEMENT CONCRETE DRIVEWAY

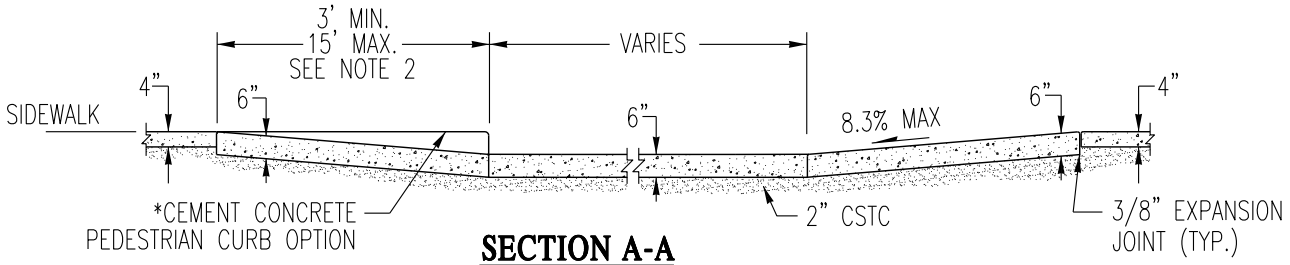

SECTION A-A

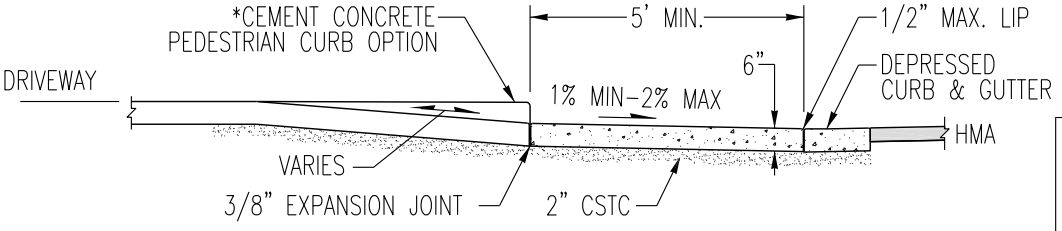

SECTION B-B

*NOTE:
OPTION USED WILL BE DETERMINED BY CITY ENGINEER; DEPENDENT UPON FIELD CONDITIONS.

LEGEND: SLOPE IN EITHER DIRECTION

NOTES:

1. SEE STANDARD DETAIL ST7 FOR CURB, GUTTER AND SIDEWALK NOTES.
2. THE CURB RAMP MAXIMUM RUNNING SLOPE SHALL NOT REQUIRE THE RAMP LENGTH TO EXCEED 15' TO AVOID CHASING THE SLOPE INDEFINITELY WHEN CONNECTING TO STEEP GRADES.
3. WHEN THE DRIVEWAY WIDTH EXCEEDS 15', CONSTRUCT A FULL DEPTH EXPANSION JOINT WITH 3/8" JOINT FILLER ALONG THE DRIVEWAY CENTERLINE. CONSTRUCT EXPANSION JOINTS PARALLEL WITH THE CENTERLINE AS REQUIRED AT 15' MAXIMUM SPACING WHEN DRIVEWAY WIDTHS EXCEED 30'.
4. SEE RMC 12.04.095 THRU 12.04.120 FOR ADDITIONAL DETAILS

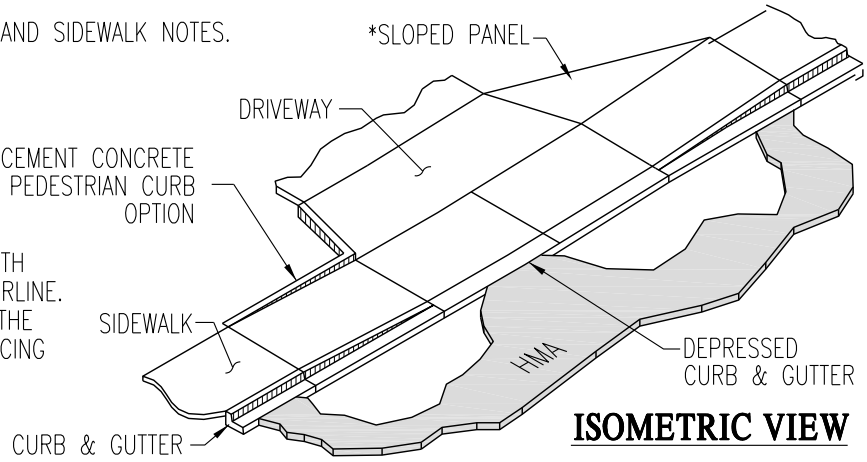

ISOMETRIC VIEW

Richland Washington

STANDARD NON-RESIDENTIAL DRIVEWAY (TYPE 1)

PUBLIC WORKS ENGINEERING	
APPR. BY: PKR	DATE: 06.19
DRAWN BY: EY	DWG: ST2A
CAD FILE: 2013_ST2A_06_2019	

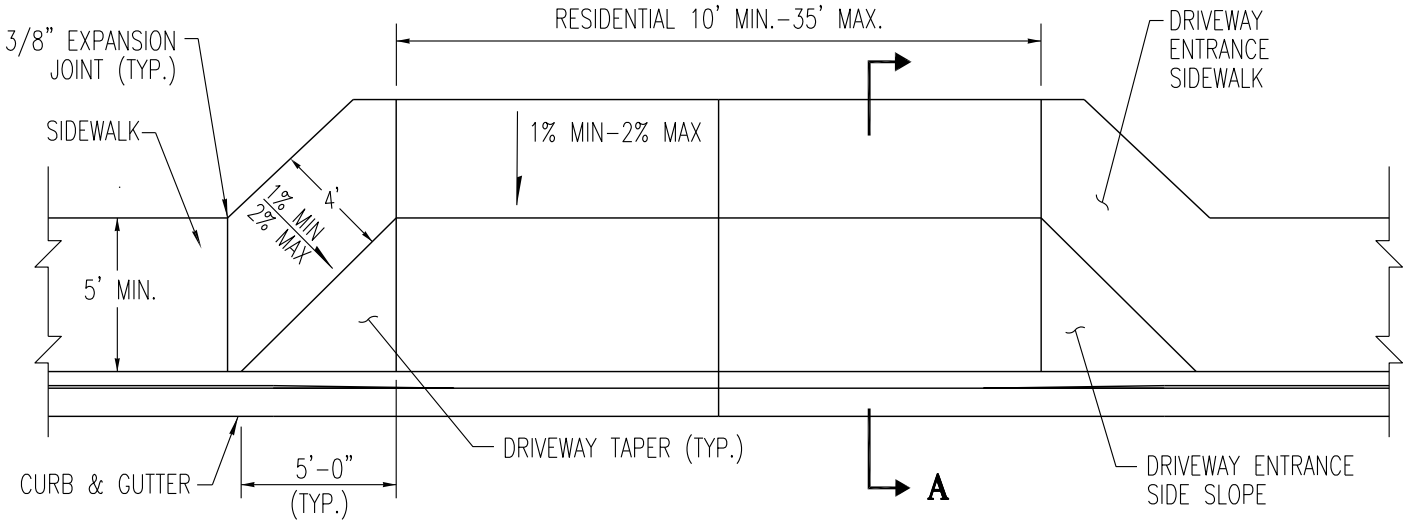

CEMENT CONCRETE DRIVEWAY

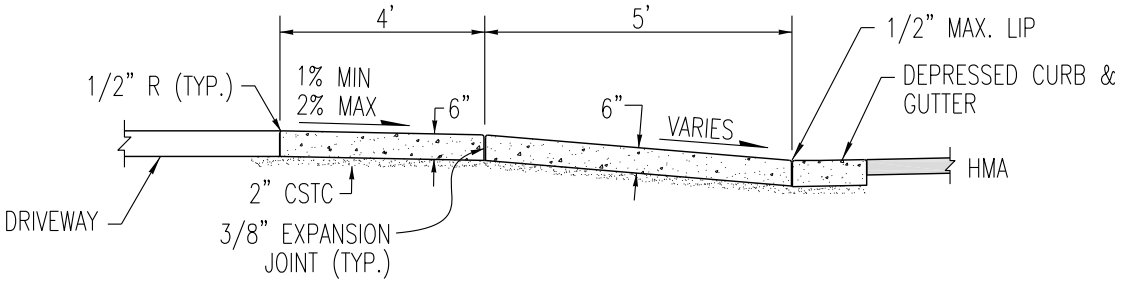

SECTION A-A

LEGEND: SLOPE

NOTES:

1. SEE STANDARD DETAIL ST7 FOR CURB, GUTTER AND SIDEWALK NOTES.
2. WHEN THE DRIVEWAY WIDTH EXCEEDS 15', CONSTRUCT A FULL DEPTH EXPANSION JOINT WITH 3/8" JOINT FILLER ALONG THE DRIVEWAY CENTERLINE. CONSTRUCT EXPANSION JOINTS PARALLELWITH THE CENTERLINE AS REQUIRED AT 15' MAXIMUM SPACING WHEN DRIVEWAY WIDTHS EXCEED 30'.
3. SEE RMC 12.04.090 AND 12.04.120 FOR ADDITIONAL DETAILS

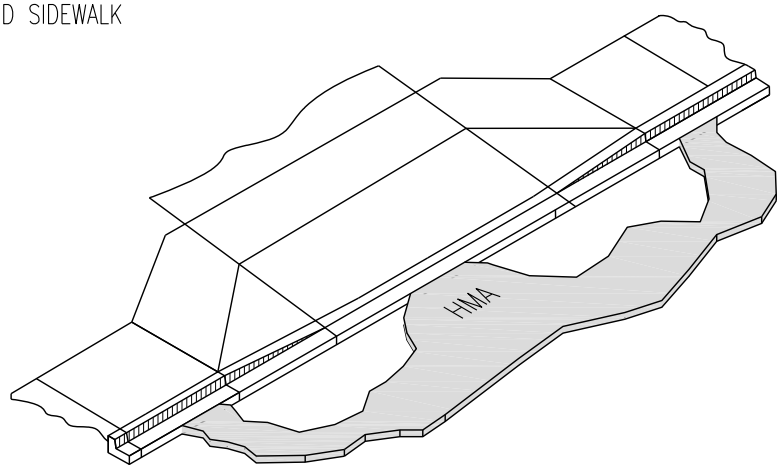

ISOMETRIC VIEW

Richland Washington

STANDARD RESIDENTIAL DRIVEWAY (TYPE 2)

PUBLIC WORKS ENGINEERING	
APPR. BY: PKR	DATE: 06.19
DRAWN BY: EY	DWG: ST3
CAD FILE: 2013_ST3_06_2019	

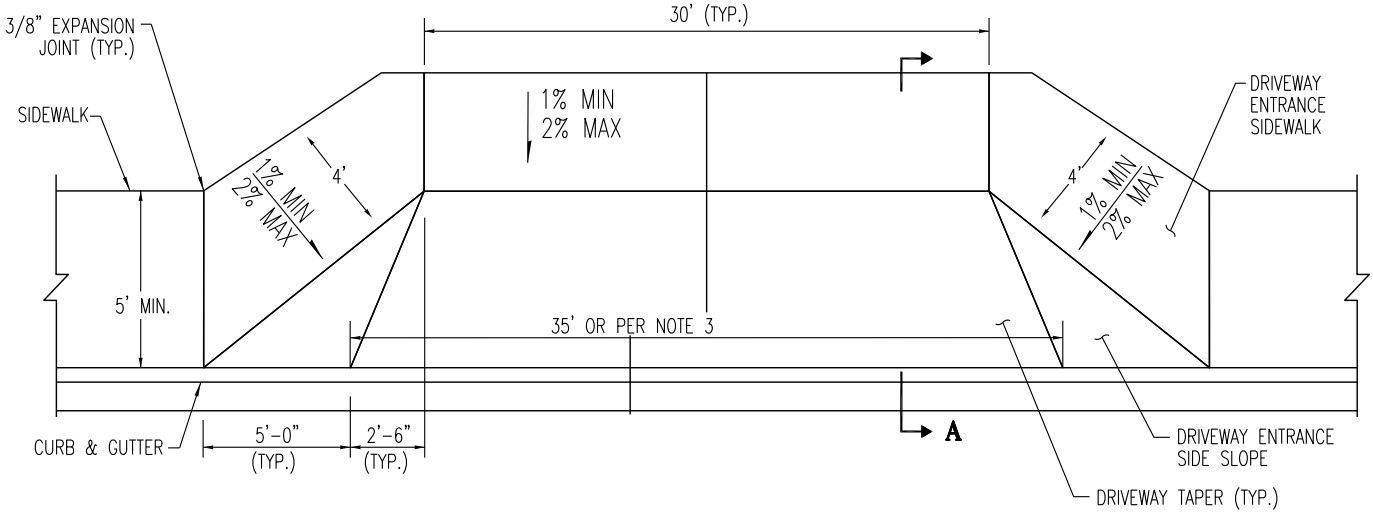

CEMENT CONCRETE DRIVEWAY

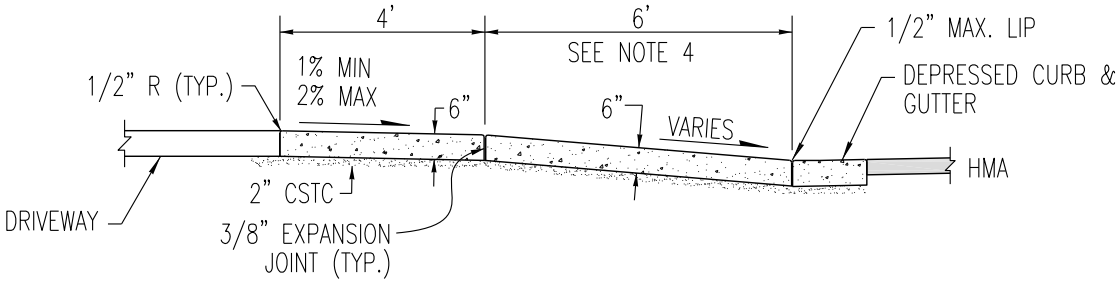

SECTION A-A

LEGEND: SLOPE

NOTES:

1. SEE STANDARD DETAIL ST7 FOR CURB, GUTTER AND SIDEWALK NOTES.
2. WHEN THE DRIVEWAY WIDTH EXCEEDS 15', CONSTRUCT A FULL DEPTH EXPANSION JOINT WITH 3/8" JOINT FILLER ALONG THE DRIVEWAY CENTERLINE. CONSTRUCT EXPANSION JOINTS PARALLELWITH THE CENTERLINE AS REQUIRED AT 15' MAXIMUM SPACING WHEN DRIVEWAY WIDTHS EXCEED 30'.
3. SEE RMC 12.04.095 THRU 12.04.120 FOR ADDITIONAL DETAILS
4. THIS DIMENSION MAY BE REDUCED TO AS LOW AS 4'. REDUCTION REQUIRES VARIANCE REQUEST APPROVED BY CITY ENGINEER.

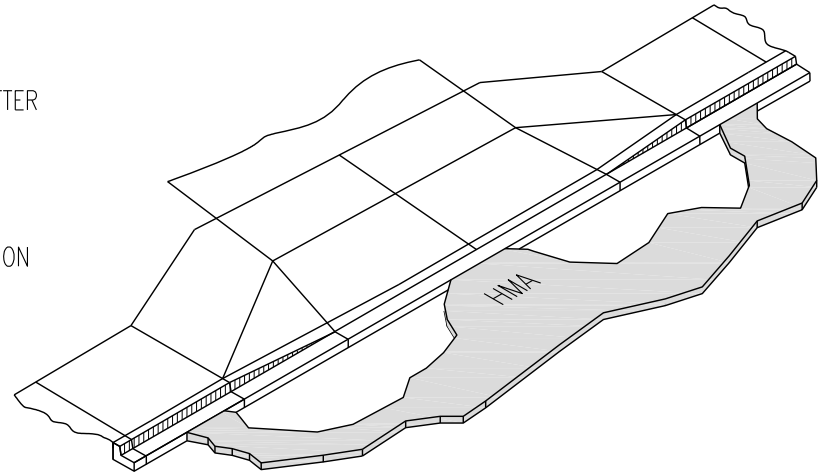

ISOMETRIC VIEW

Richland Washington

STANDARD NON-RESIDENTIAL DRIVEWAY (TYPE 2)

PUBLIC WORKS ENGINEERING	
APPR. BY: PKR	DATE: 06.19
DRAWN BY: EY	DWG: ST3A
CAD FILE: 2013_ST3A_06_2019	

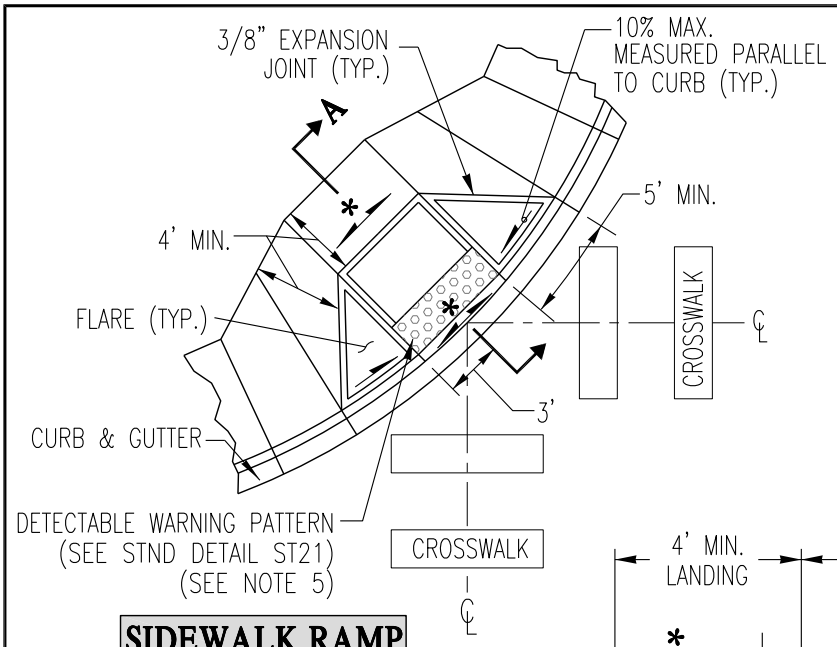

SIDEWALK RAMP TYPE 1A

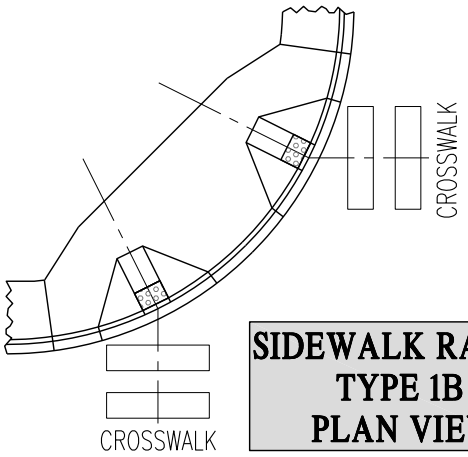

SIDEWALK RAMP TYPE 1B PLAN VIEW

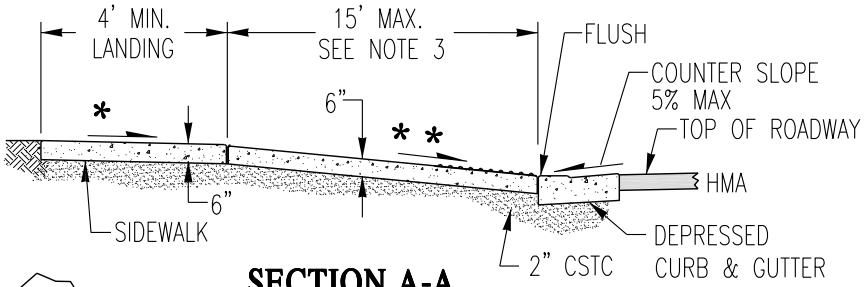

SECTION A-A

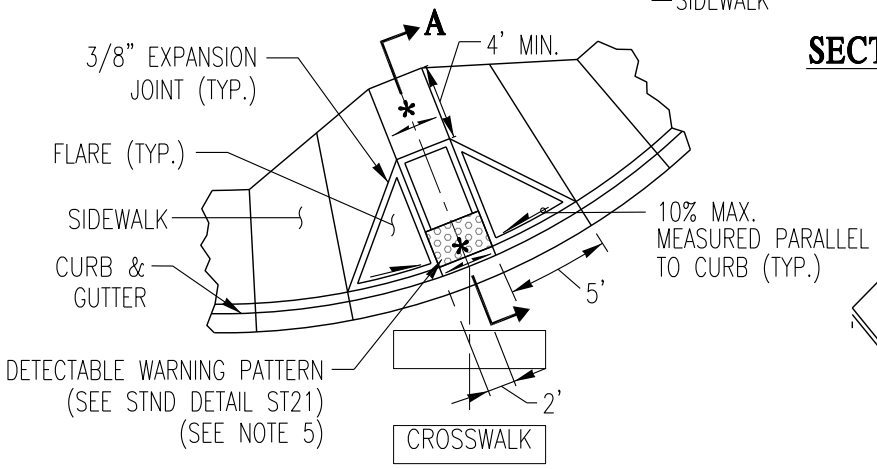

SIDEWALK RAMP TYPE 1B

SEE NOTE 4

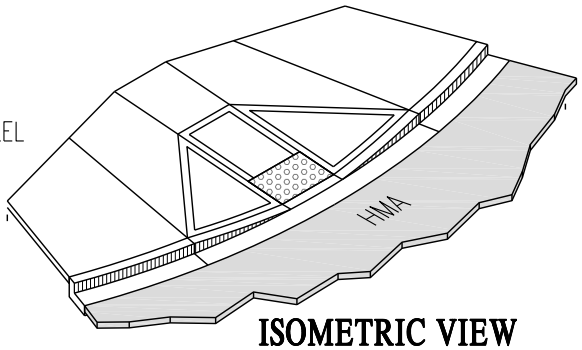

ISOMETRIC VIEW

LEGEND:

SLOPE IN EITHER DIRECTION

* 1.5% OR FLATTER RECOMMENDED FOR DESIGN/FORMWORK (2% MAX)

** 7.5% OR FLATTER RECOMMENDED FOR DESIGN/FORMWORK (8.3% MAX)

NOTES:

1. THE TYPE 1B RAMPS ARE THE PREFERRED RAMPS. WHEN IT IS INFEASIBLE TO PROVIDE A RAMP FOR EACH OF THE TWO CROSSWALKS, A SINGLE TYPE 1A RAMP FOR BOTH CROSSWALKS CAN BE USED WITH THE APPROVAL OF THE ENGINEER.
2. SEE STANDARD DETAIL ST7 FOR CURB, GUTTER AND SIDEWALK NOTES.
3. THE CURB RAMP MAXIMUM RUNNING SLOPE SHALL NOT REQUIRE THE RAMP LENGTH TO EXCEED 15' TO AVOID CHASING THE SLOPE INDEFINITELY WHEN CONNECTING TO STEEP GRADES. WHEN APPLYING THE 15' MAXIMUM LENGTH, THE RUNNING SLOPE OF THE CURB RAMP SHALL BE AS FLAT AS FEASIBLE.
4. DETAILED DESIGN INFORMATION SHALL BE PROVIDED BY THE ENGINEER WITH THE ELEVATIONS PROVIDED FOR ALL FOUR CORNERS OF THE LANDING.
5. CURB SHALL BE FORMED TO PROVIDE A STRAIGHT LINE ALONG THE BACK OF CURB ADJACENT TO THE WARNING SURFACE.

Richland Washington

SIDEWALK RAMP TYPE 1A AND 1B

PUBLIC WORKS ENGINEERING	
APPR. BY: PKR	DATE: 05.18
DRAWN BY: EY	DWG: ST4
CAD FILE: 2014_ST4_05_2018	

NOTES:

1. THE TYPE 2B RAMPS ARE THE PREFERRED RAMPS. WHEN IT IS INFEASIBLE TO PROVIDE A RAMP FOR EACH OF THE TWO CROSSWALKS, A SINGLE TYPE 2A RAMP FOR BOTH CROSSWALKS CAN BE USED WITH THE APPROVAL OF THE ENGINEER.
2. SEE STANDARD DETAIL ST7 FOR CURB, GUTTER AND SIDEWALK NOTES.
3. THE CURB RAMP MAXIMUM RUNNING SLOPE SHALL NOT REQUIRE THE RAMP LENGTH TO EXCEED 15' TO AVOID CHASING THE SLOPE INDEFINITELY WHEN CONNECTING TO STEEP GRADES. WHEN APPLYING THE 15' MAXIMUM LENGTH, THE RUNNING SLOPE OF THE CURB RAMP SHALL BE AS FLAT AS FEASIBLE.
4. DETAILED DESIGN INFORMATION SHALL BE PROVIDED BY ENGINEER ON THE CONSTRUCTION PLANS, INCLUDING DIMENSIONS AND ELEVATIONS AT TOP AND BOTTOM OF LANDING AT BOTH FRONT AND BACK OF SIDEWALK, AS WELL AS CURB RAMP TRANSITION LENGTHS. MINIMUM CURB LENGTH TRANSITION IS 5'.
5. CURB SHALL BE FORMED TO PROVIDE A STRAIGHT LINE ALONG THE BACK OF CURB ADJACENT TO THE WARNING PATTERN.

LEGEND:

SLOPE IN EITHER DIRECTION

* 1.5% OR FLATTER RECOMMENDED FOR DESIGN/FORMWORK (2% MAX)

* * 7.5% OR FLATTER RECOMMENDED FOR DESIGN/FORMWORK (8.3% MAX)

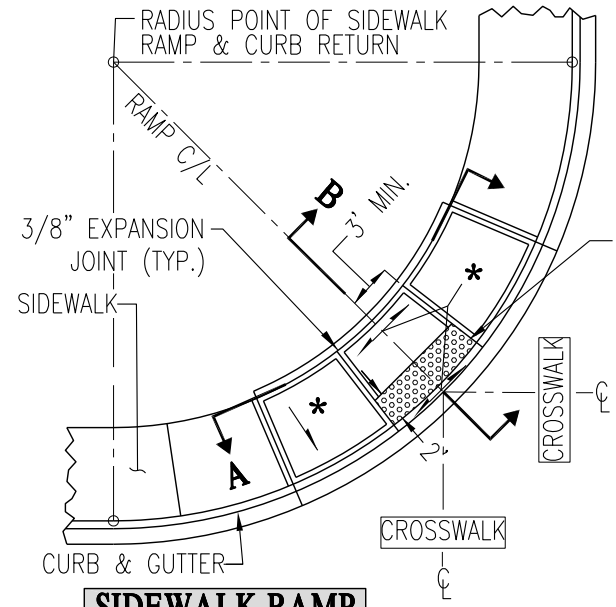

SIDEWALK RAMP TYPE 2A

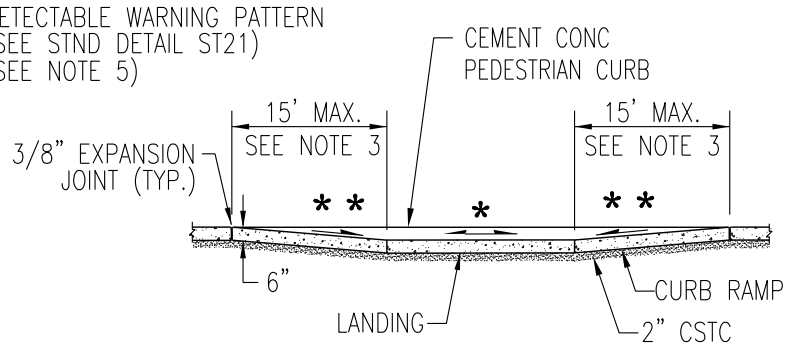

SECTION A-A

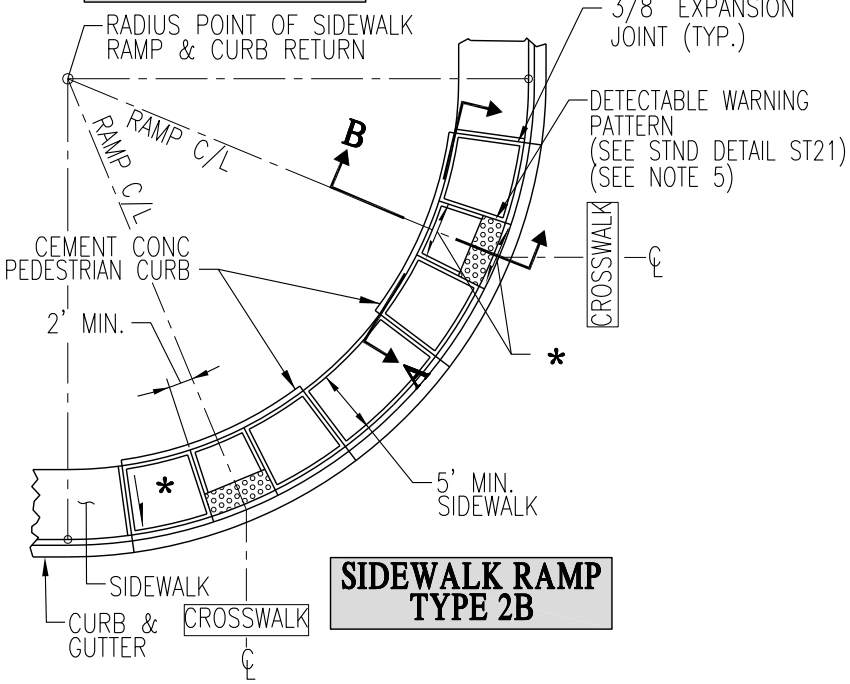

SIDEWALK RAMP TYPE 2B

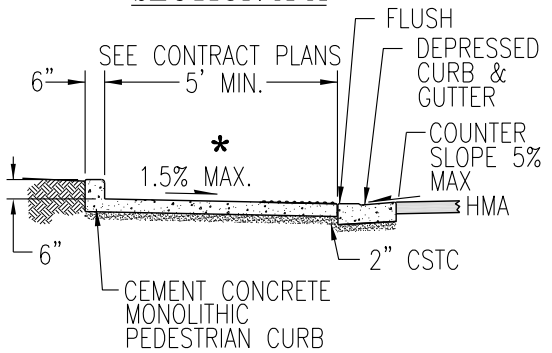

SECTION B-B

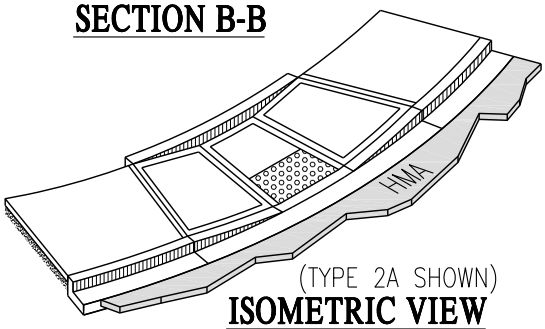

(TYPE 2A SHOWN)

ISOMETRIC VIEW

Richland Washington

SIDEWALK RAMP TYPE 2A AND 2B

PUBLIC WORKS ENGINEERING	
APPR. BY: PKR	DATE: 05.18
DRAWN BY: EY	DWG: ST5
CAD FILE: 2013_ST5_05_2018	

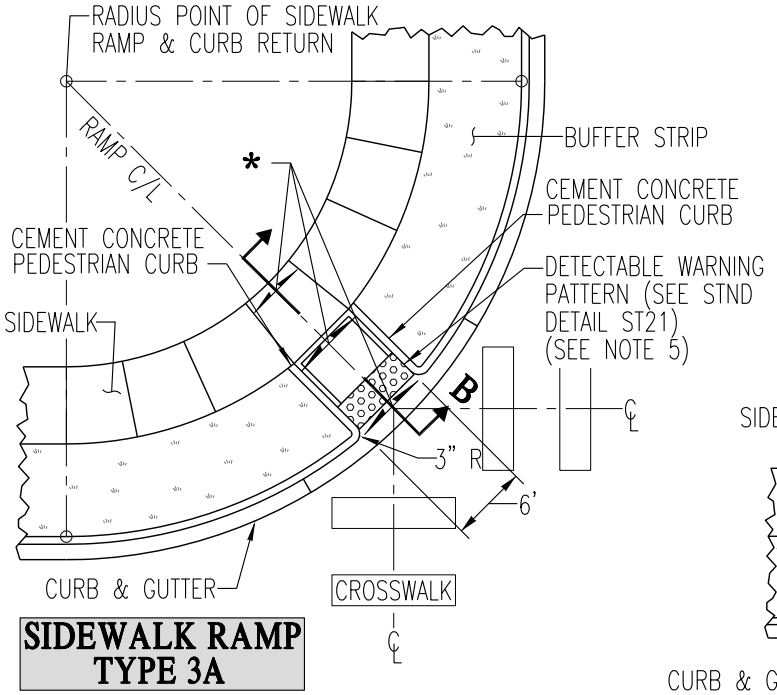

SIDEWALK RAMP TYPE 3A

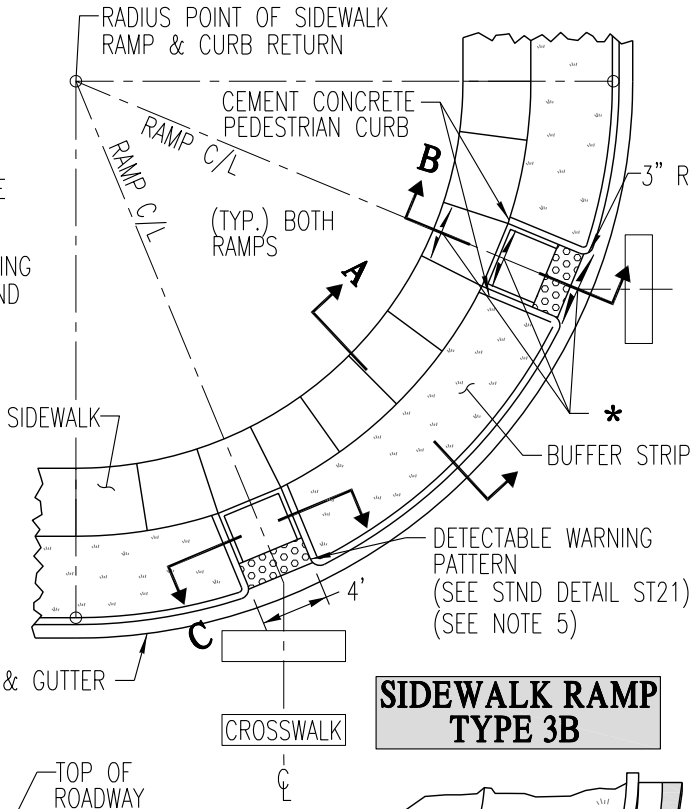

SIDEWALK RAMP TYPE 3B

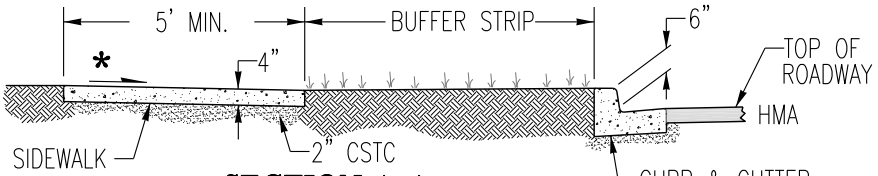

SECTION A-A

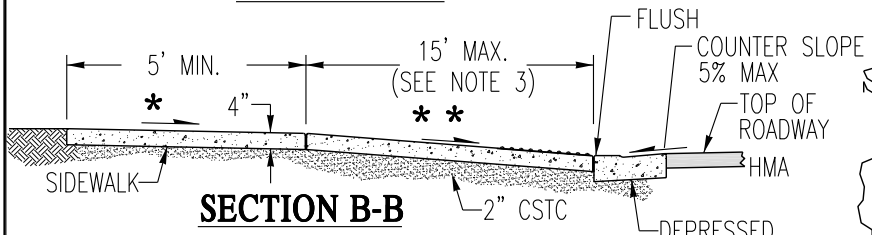

SECTION B-B

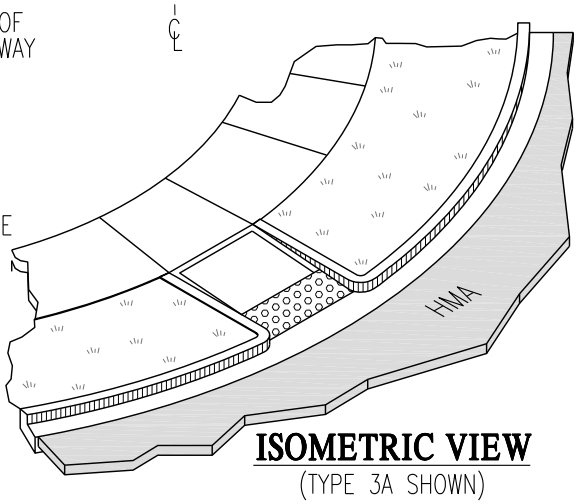

ISOMETRIC VIEW
(TYPE 3A SHOWN)

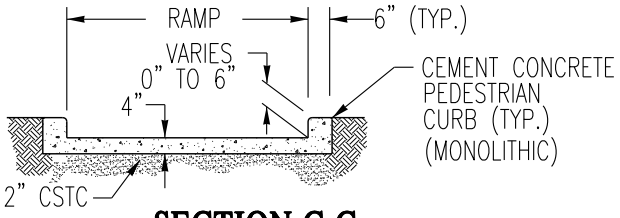

SECTION C-C

LEGEND:

SLOPE IN EITHER DIRECTION

* 1.5% OR FLATTER RECOMMENDED FOR DESIGN/FORMWORK (2% MAX)

* * 7.5% OR FLATTER RECOMMENDED FOR DESIGN/FORMWORK (8.3% MAX)

NOTES:

1. THE TYPE 3B RAMP ARE THE PREFERRED RAMPS. WHEN IT IS INFEASIBLE TO PROVIDE A RAMP FOR EACH OF THE TWO CROSSWALKS, A SINGLE TYPE 3A RAMP FOR BOTH CROSSWALKS CAN BE USED WITH THE APPROVAL OF THE ENGINEER.
2. SEE STANDARD DETAIL ST7 FOR CURB, GUTTER AND SIDEWALK NOTES.
3. THE CURB RAMP MAXIMUM RUNNING SLOPE SHALL NOT REQUIRE THE RAMP LENGTH TO EXCEED 15' TO AVOID CHASING THE CURB RAMP MAXIMUM RUNNING SLOPE SHALL NOT REQUIRE THE RAMP LENGTH TO EXCEED 15' TO AVOID CHASING RUNNING SLOPE OF THE CURB RAMP SHALL BE AS FLAT AS FEASIBLE.
4. DETAILED DESIGN INFORMATION SHALL BE PROVIDED BY THE ENGINEER WITH THE ELEVATIONS PROVIDED FOR ALL FOUR CORNERS OF THE LANDING AND RAMP LENGTH.
5. CURB SHALL BE FORMED TO PROVIDE A STRAIGHT LINE ALONG THE BACK OF CURB ADJACENT TO THE WARNING PATTERN.

Richland Washington

SIDEWALK RAMP TYPE 3A AND 3B

PUBLIC WORKS ENGINEERING	
APPR. BY: PKR	DATE: 05.18
DRAWN BY: EY	DWG: ST6
CAD FILE: 2013_ST6_05_2018	

CONSTRUCTION NOTES FOR PEDESTRIAN FACILITIES

1. ASPHALT PATCHING – SAWCUT A MINIMUM OF 24" OF ASPHALT BEYOND THE FACE OF NEW GUTTER, REMOVE ALL DEBRIS AND ADD CRUSHED SURFACE TOP COURSE (CSTC) AS NEEDED. COMPACT AREA, PLACE HMA AND COMPACT AS REQUIRED.
2. CONCRETE SHALL HAVE A MINIMUM COMPRESSIVE STRENGTH OF 3000 PSI FOR SIDEWALKS. CONCRETE FOR CURB, GUTTER AND DRIVEWAYS SHALL HAVE A MINIMUM COMPRESSIVE STRENGTH OF 4000 PSI.
3. CONTRACTOR SHALL CALL FOR CITY INSPECTION PRIOR TO CUTTING AND/OR REMOVING CURB, GUTTER, AND SIDEWALK. THE INSPECTOR WILL MARK AREA TO BE CUT OR REMOVED. CONTRACTOR'S PRESENCE IS ADVISABLE.
4. CONTRACTOR SHALL CALL FOR INSPECTION OF ALL FORMS PRIOR TO POURING CONCRETE FOR CURB, GUTTER, SIDEWALK AND DRIVEWAYS. ALL EXPANSION JOINTS SHALL BE IN PLACE AT TIME OF INSPECTION. ("WET SET" MASTIC IS NOT ALLOWED)
5. THE INSPECTOR SHALL CHECK ALL JOINT LOCATIONS. ALL EXPANSION JOINTS SHALL BE MARKED WITH AN "M".
6. CONTRACTOR SHALL NOT POUR ANY CONCRETE UNTIL ALL JOINTS HAVE BEEN CHECKED AND GIVEN VERBAL OR WRITTEN APPROVAL BY INSPECTOR.
7. THE FACE OF CURB SHALL BE STAMPED AT ALL UTILITY CROSSINGS, MAIN LINES AND SERVICE LINES AS FOLLOWS: "S"–SANITARY SEWER, "W"–WATER, "I"–IRRIGATION, "C"–CONDUITS
8. CURB, GUTTER, AND SIDEWALK SURFACES SHALL HAVE A LIGHT BROOM FINISH. SIDEWALK SHALL BE BROOMED PERPENDICULAR TO CURB LINE IN A UNIFORM AND CONSISTENT MANNER.
9. A MINIMUM OF 2" OF CSTC SHALL BE PLACED AND COMPACTED UNDER ALL CURB, GUTTER AND SIDEWALK.
10. JOINT SPACING SHALL BE NO LESS THAN 2.5' AND NO GREATER THAN 5'.
11. SIDEWALKS SHALL BE A MINIMUM OF 5 FEET WIDE. IN COMMERCIAL ZONED C–2, C–3, AND CBD AREAS THE SIDEWALKS SHALL BE 8 FEET WIDE.
12. WHEN UTILITY METERS, VAULTS, TRANSFORMERS, ETC. EXIST IN THE AREA BETWEEN THE LOT LINE AND THE DRIVEWAY, THE DRIVEWAY MUST BE CONSTRUCTED AT LEAST 10' FROM THE LOT LINE.
13. IF A CONCRETE DRIVEWAY IS TO BE EXTENDED PAST THE R/W LINE A 3/8" MASTIC EXPANSION JOINT SHALL BE INSTALLED FULL LENGTH OF DRIVEWAY AND FULL DEPTH OF DRIVEWAY AT THE BACK OF SIDEWALK. DRIVEWAY SHALL LINE UP WITH THE BOTTOM OF THE DRIVEWAY TRANSITIONS IN THE CURB AND GUTTER.
14. MAINTAIN 4' MINIMUM CLEARANCE FROM ANY OBSTRUCTION ON SIDEWALK AND SIDEWALK RAMP.
15. AVOID PLACING DRAINAGE STRUCTURES, JUNCTION BOXES, OR OTHER OBSTRUCTIONS IN FRONT OF DRIVEWAY ENTRANCES.
16. AT NO TIME SHALL ANY SLOPES EXCEED CURRENT ADA STANDARDS.

Richland Washington

CURB, GUTTER & SIDEWALK NOTES

PUBLIC WORKS ENGINEERING	
APPR. BY: PKR	DATE: 09.13
DRAWN BY: LD	DWG: ST7
CAD FILE: 2013_ST7_09_2013	

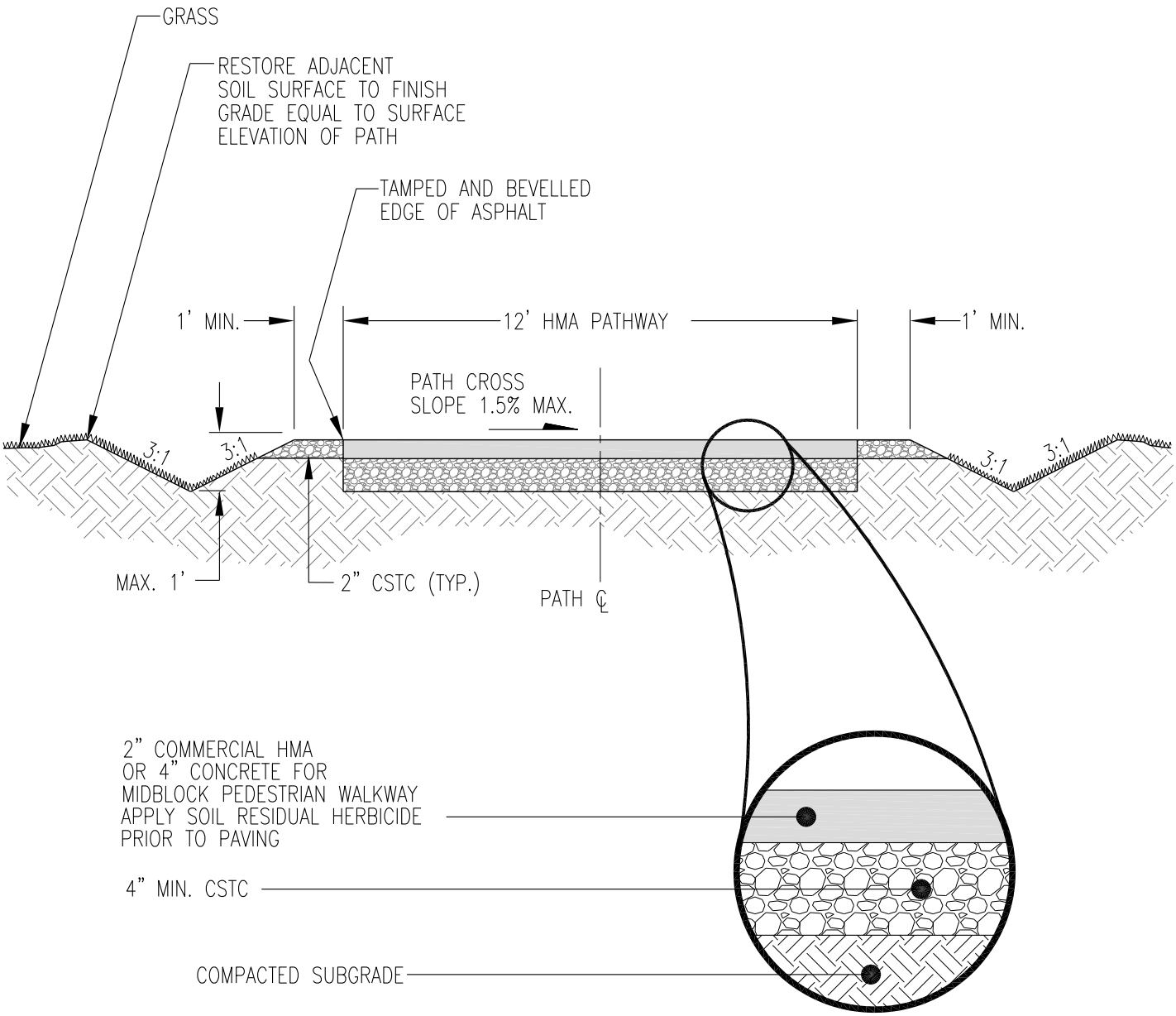

Richland Washington

BIKE/PED PATH

PUBLIC WORKS ENGINEERING	
APPR. BY: PKR	DATE: 09.13
DRAWN BY: LD	DWG: ST8
CAD FILE: 2013_ST8_09_2013	

TYPICAL LANE LAYOUT

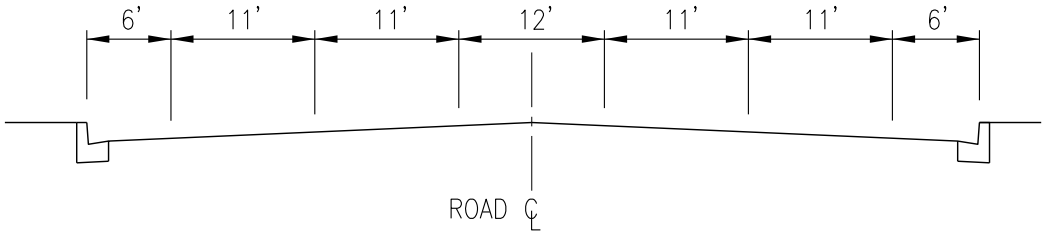

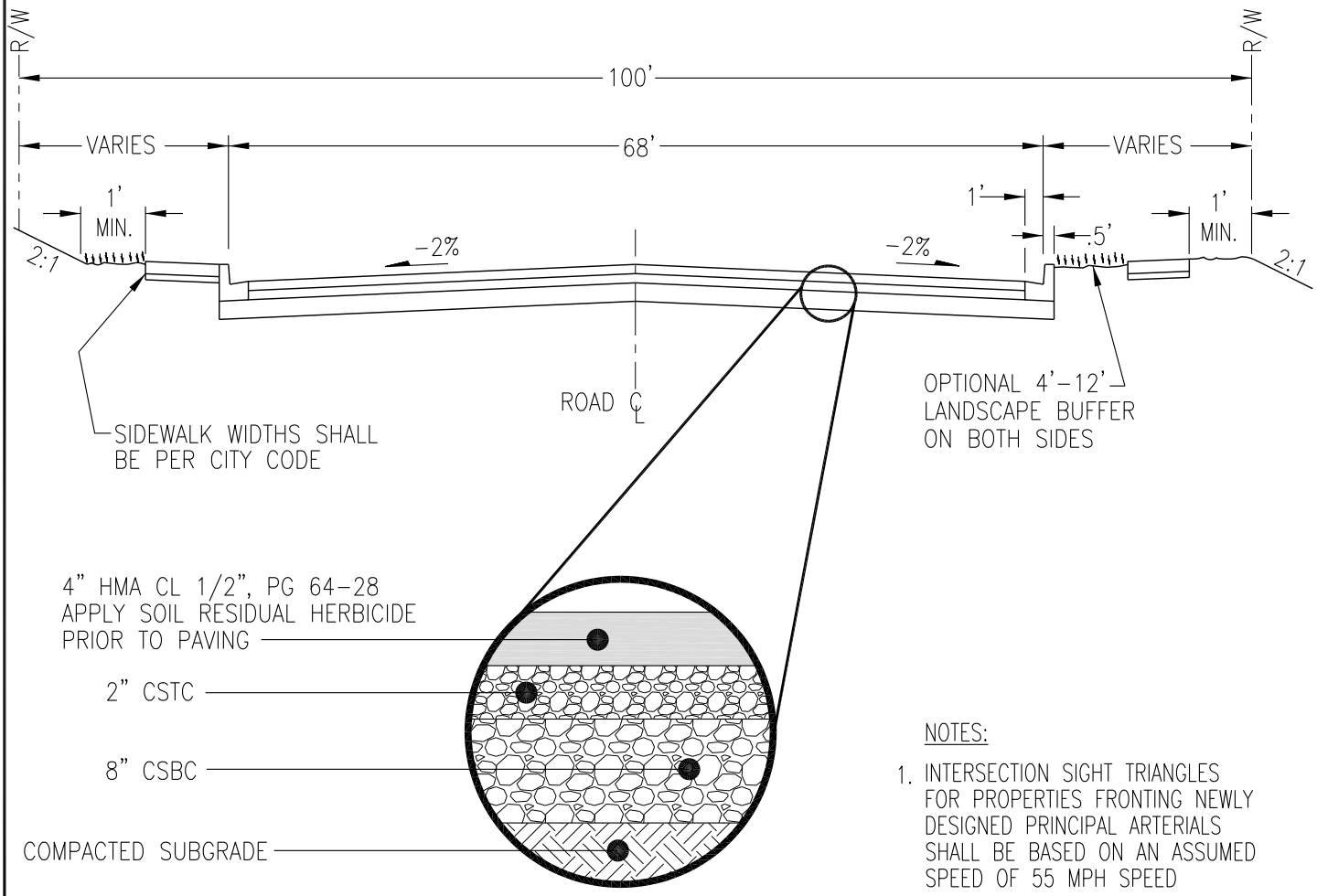

NOTES:

1. INTERSECTION SIGHT TRIANGLES FOR PROPERTIES FRONTING NEWLY DESIGNED PRINCIPAL ARTERIALS SHALL BE BASED ON AN ASSUMED SPEED OF 55 MPH SPEED

PRINCIPAL ARTERIAL

PUBLIC WORKS ENGINEERING	
APPR. BY: PKR	DATE: 06.19
DRAWN BY: EY	DWG: ST9
CAD FILE: 2013_ST9_06_2019	

TYPICAL LANE LAYOUT

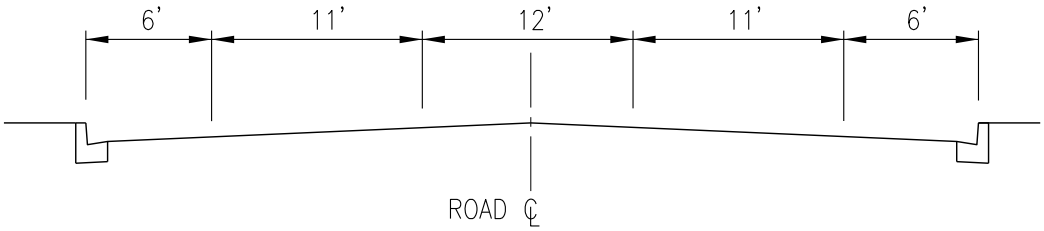

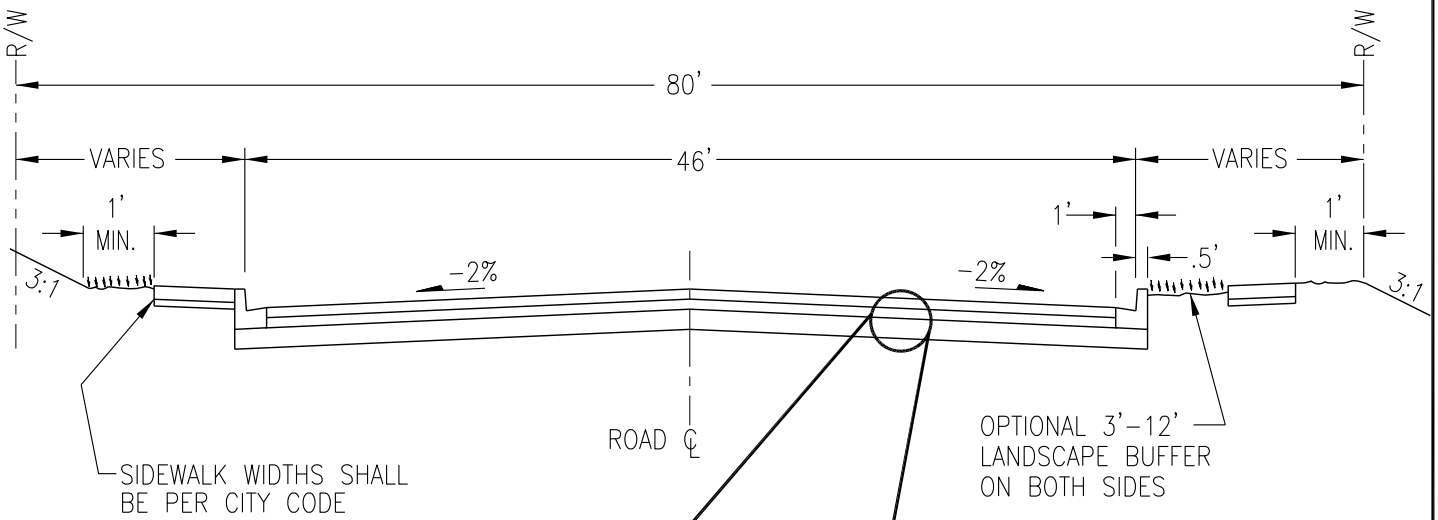

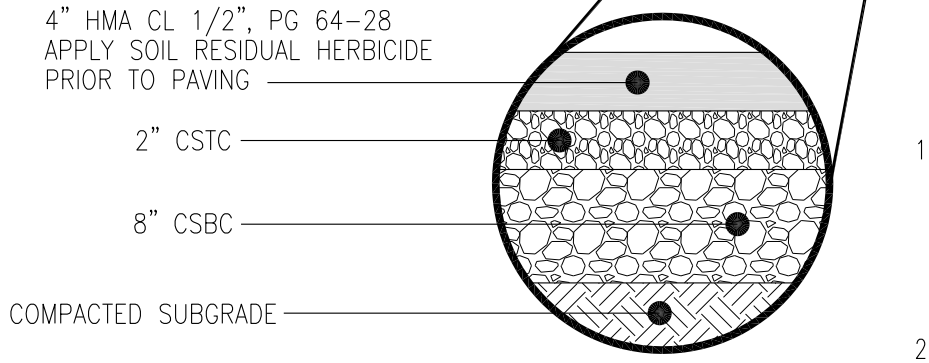

NOTES:

1. INTERSECTION SIGHT TRIANGLES FOR PROPERTIES FRONTING NEWLY DESIGNED MINOR ARTERIALS SHALL BE BASED ON AN ASSUMED SPEED OF 45 MPH SPEED, UNLESS THE CITY ENGINEER DIRECTS THAT A DIFFERENT SPEED BE USED.
2. WHEN A MINOR ARTERIAL REQUIRES A 5-LANE CROSS SECTION AS DETERMINED BY THE PUBLIC WORKS DIRECTOR, THE CROSS SECTION DRAWING FOR PRINCIPAL ARTERIAL (ST9) SHALL BE USED.

Richland Washington

MINOR ARTERIAL

PUBLIC WORKS ENGINEERING	
APPR. BY: PKR	DATE: 06.19
DRAWN BY: EY	DWG: ST10
CAD FILE: 2013_ST10_06_2019	

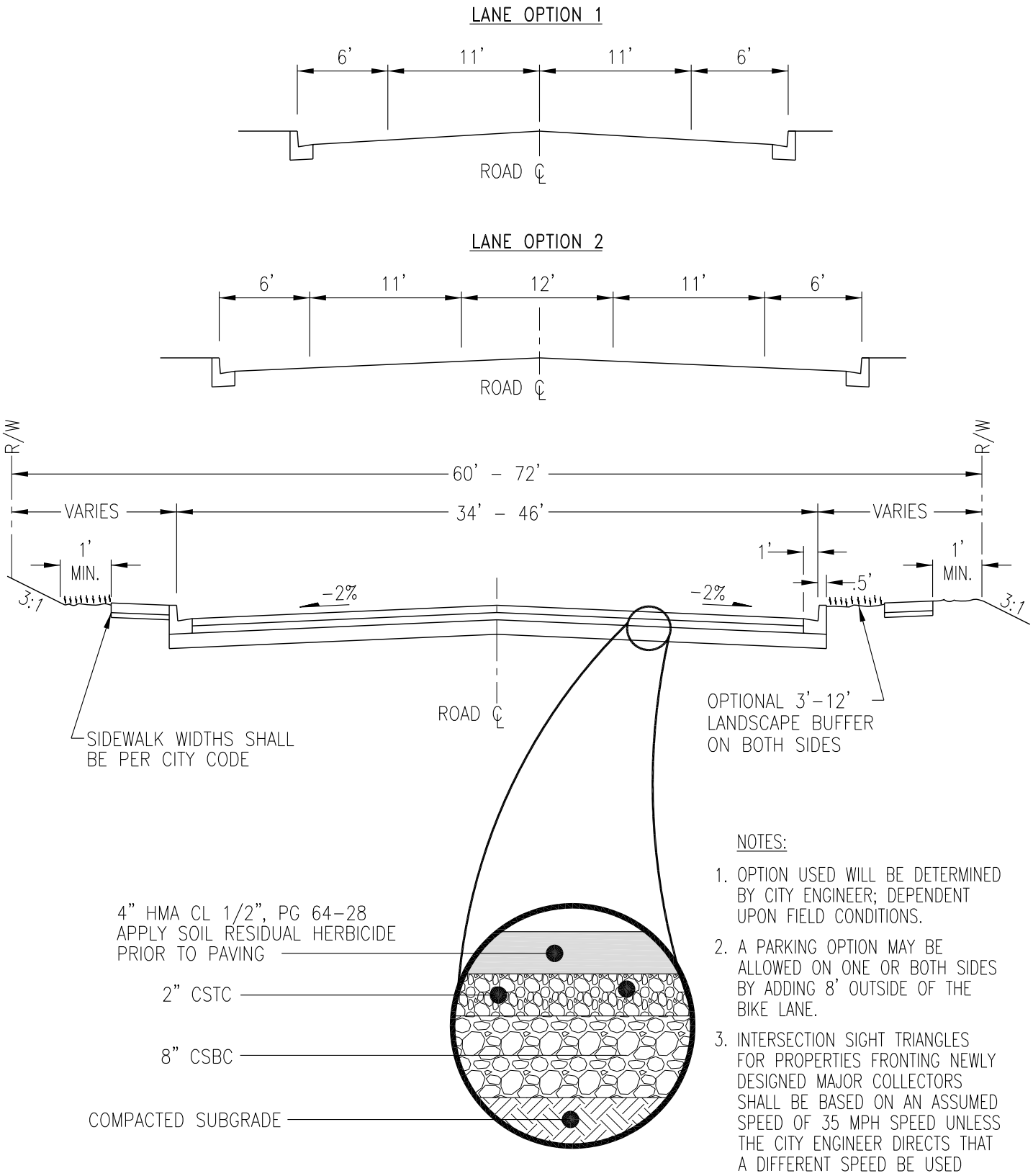

NOTES:

1. OPTION USED WILL BE DETERMINED BY CITY ENGINEER; DEPENDENT UPON FIELD CONDITIONS.
2. A PARKING OPTION MAY BE ALLOWED ON ONE OR BOTH SIDES BY ADDING 8' OUTSIDE OF THE BIKE LANE.
3. INTERSECTION SIGHT TRIANGLES FOR PROPERTIES FRONTING NEWLY DESIGNED MAJOR COLLECTORS SHALL BE BASED ON AN ASSUMED SPEED OF 35 MPH SPEED UNLESS THE CITY ENGINEER DIRECTS THAT A DIFFERENT SPEED BE USED

Richland Washington

MAJOR COLLECTOR (Arterial Collector)

PUBLIC WORKS ENGINEERING	
APPR. BY: PKR	DATE: 06.19
DRAWN BY: LD	DWG: ST11
CAD FILE: 2013_ST11_06_2019	

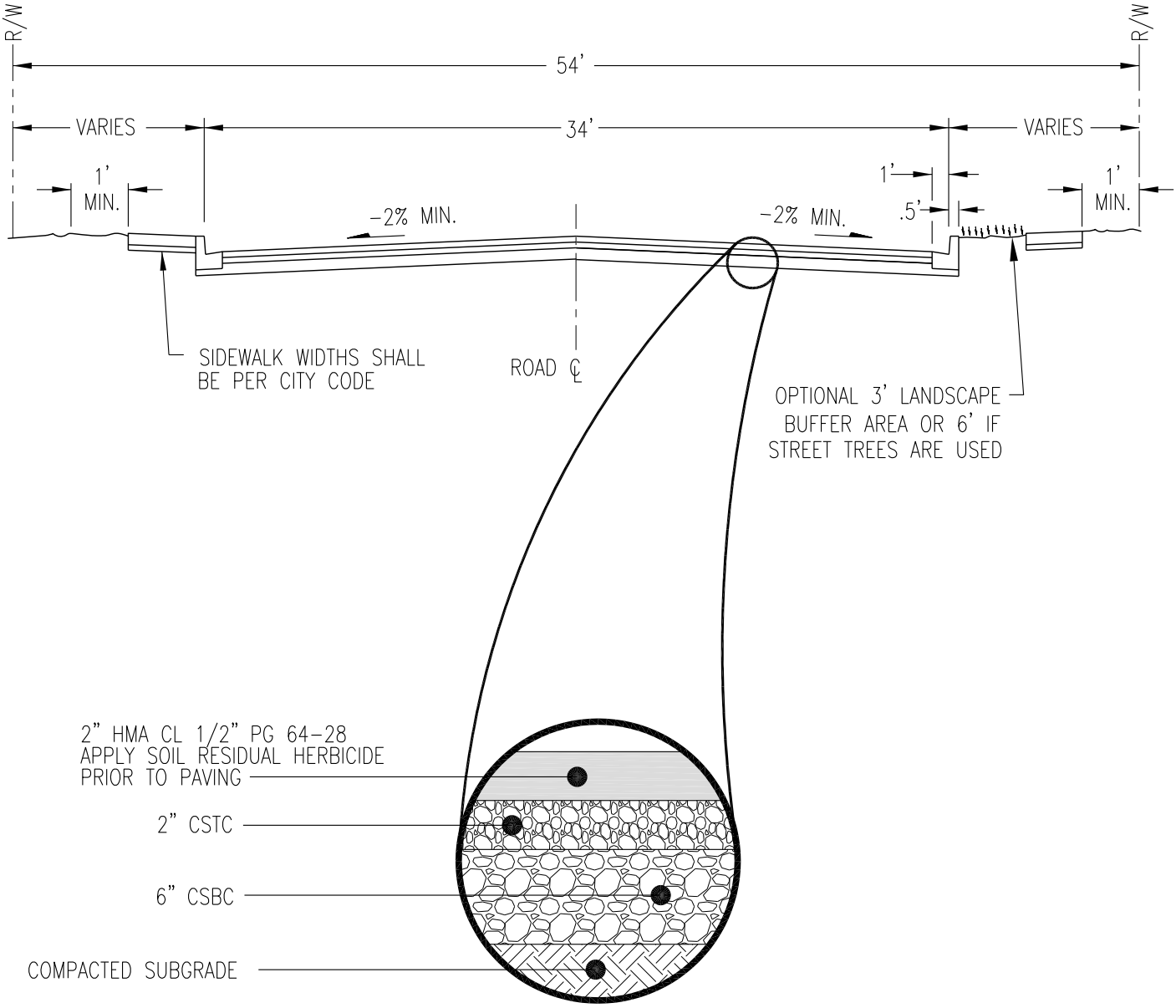

NOTES:

1. INTERSECTION SIGHT TRIANGLES FOR PROPERTIES FRONTING NEWLY DESIGNED STREETS SHALL BE BASED ON AN ASSUMED SPEED OF 30 MPH SPEED FOR MINOR COLLECTORS AND 25 MPH FOR LOCAL STREETS.

Richland Washington

MINOR (NEIGHBORHOOD) COLLECTOR and LOCAL STREET

PUBLIC WORKS ENGINEERING	
APPR. BY: PKR	DATE: 06.19
DRAWN BY: LD	DWG: ST13
CAD FILE: 2013_ST13_06_2019	

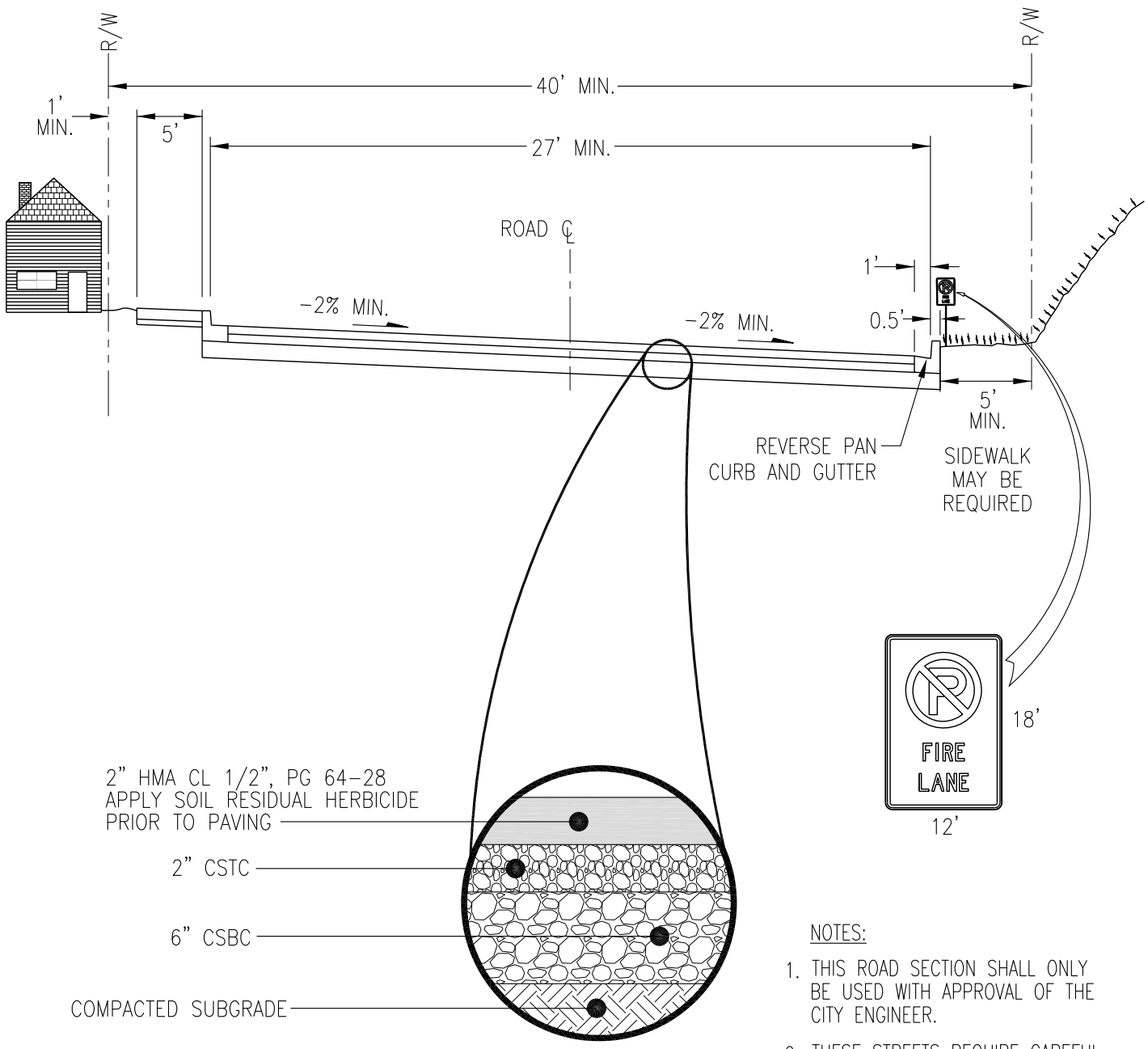

NOTES:

1. THIS ROAD SECTION SHALL ONLY BE USED WITH APPROVAL OF THE CITY ENGINEER.
2. THESE STREETS REQUIRE CAREFUL CONSIDERATION OF SIGHT TRIANGLES BY THE DESIGNER.
3. REQUIRES VARIANCE REQUEST APPROVED BY CITY ENGINEER.

Richland Washington

LOCAL STREET (SINGLE FRONTAGE)

PUBLIC WORKS ENGINEERING	
APPR. BY: PKR	DATE: 09.19
DRAWN BY: LD	DWG: ST14
CAD FILE: 2013_ST14_09_2019	

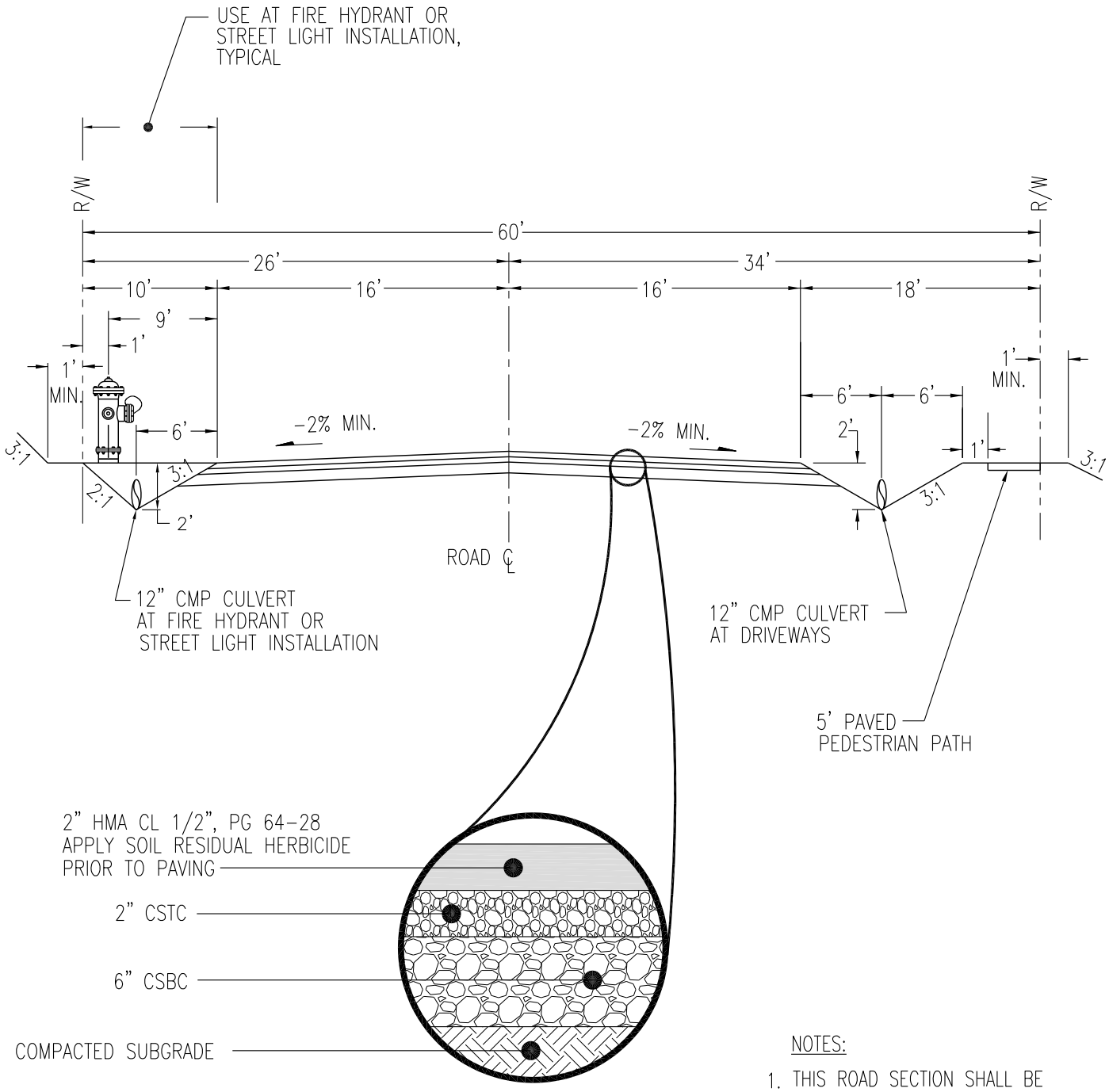

NOTES:

1. THIS ROAD SECTION SHALL BE USED WITH APPROVAL OF THE CITY ENGINEER
2. IN SOME INSTANCES A CENTER TURN LINE MAY BE REQUIRED, ADDING AN ADDITIONAL 12' OF WIDTH.
3. REQUIRES VARIANCE REQUEST APPROVED BY CITY ENGINEER

Richland Washington

RURAL STREET

PUBLIC WORKS ENGINEERING	
APPR. BY: PKR	DATE: 06.19
DRAWN BY: LD	DWG: ST15
CAD FILE: 2013_ST15_06_2019	

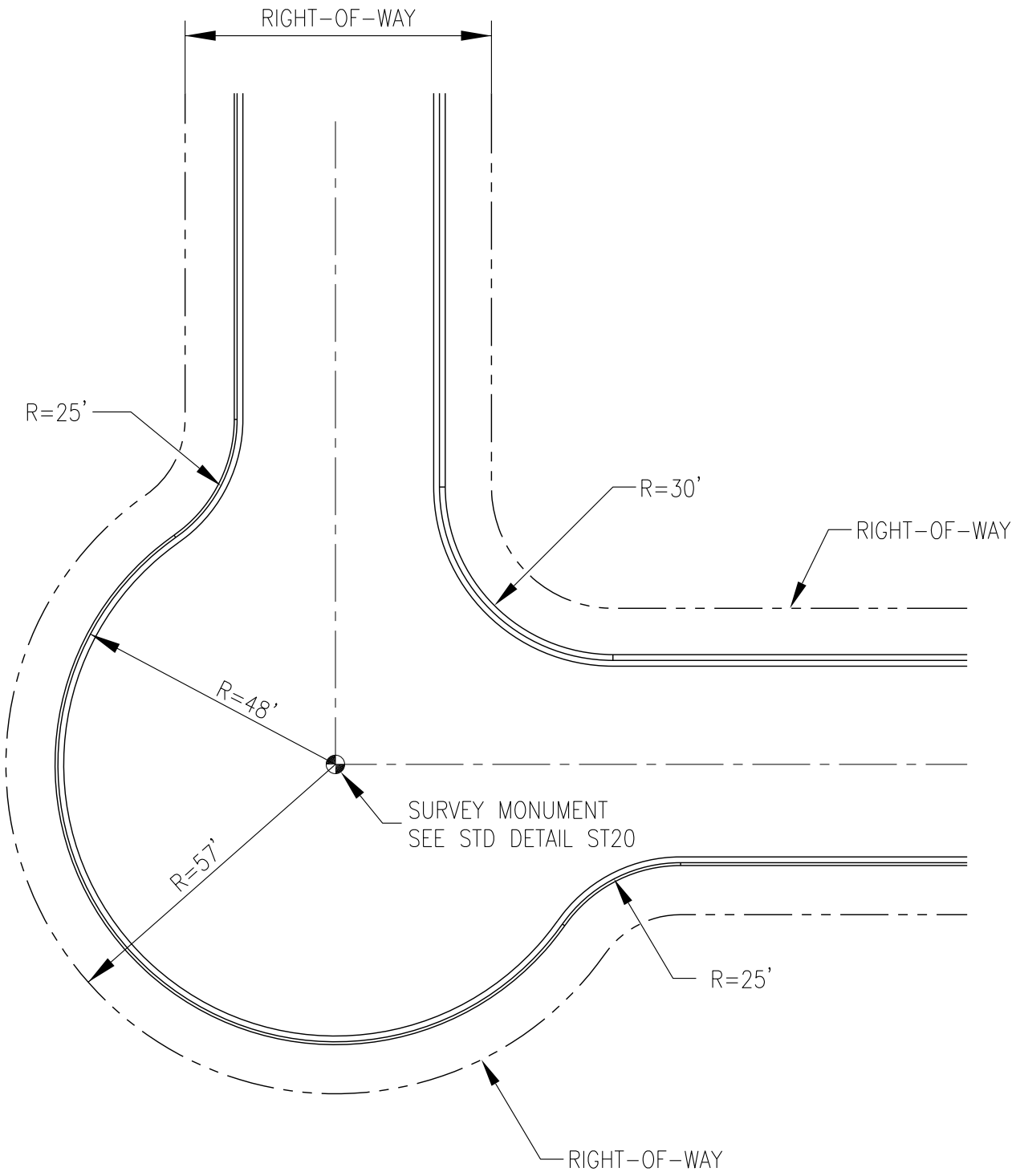

Richland Washington

LOCAL STREET RIGHT ANGLE INTERSECTION

CIVIL & UTILITY ENGINEERING	
APPR. BY: PKR	DATE: 06.19
DRAWN BY: LD	DWG: ST16
CAD FILE: 2012_ST16_06_2019	

NOTE:

CITY ENGINEER SHALL APPROVE DRIVEWAY TYPE AND LOCATION IN CUL-DE-SAC'S.

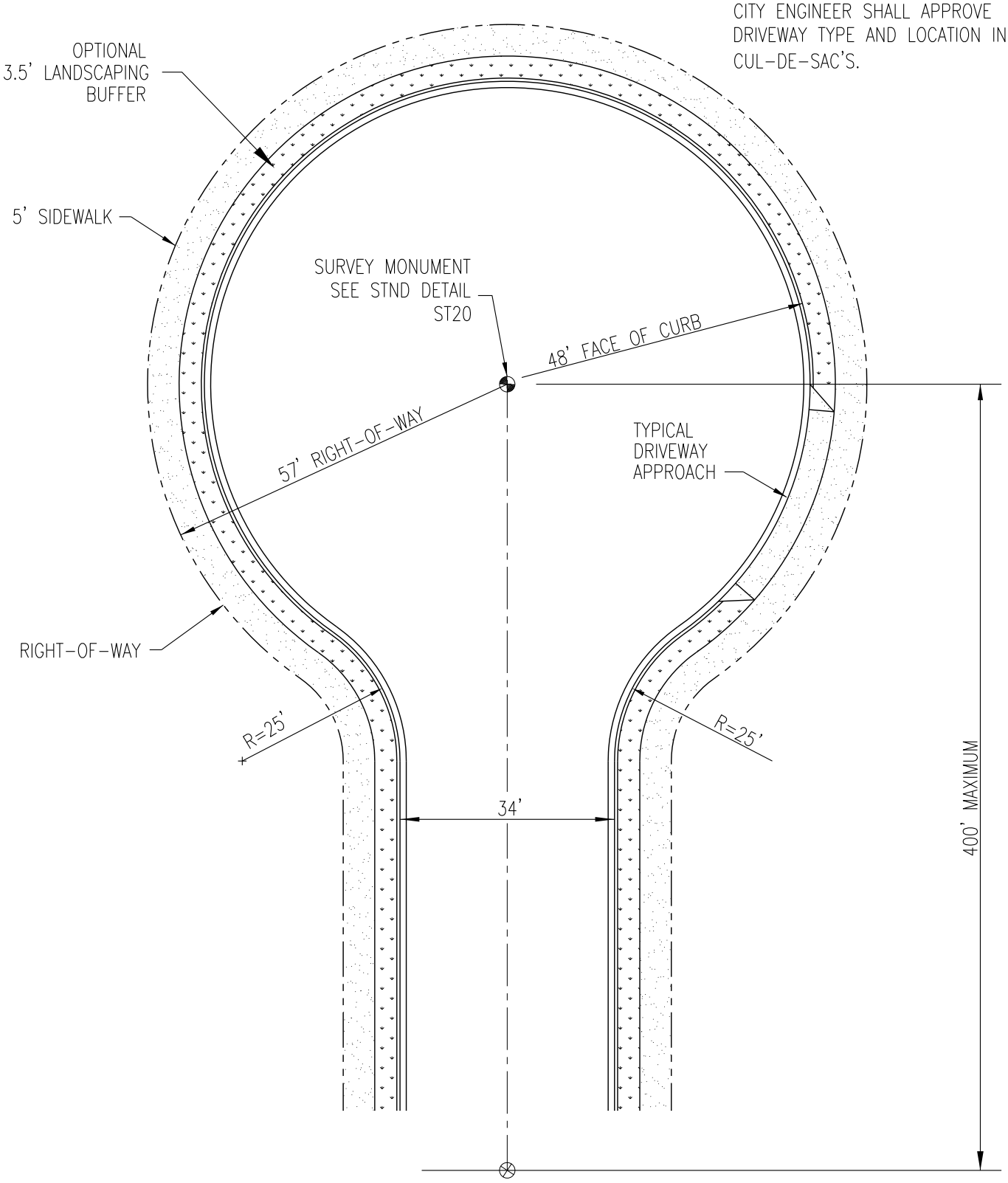

Richland Washington	STANDARD CUL-DE-SAC BULB	PUBLIC WORKS ENGINEERING
		APPR. BY: PKR — DATE: 06.19
		DRAWN BY: EY — DWG: ST17
		CAD FILE: 2012_ST17_06_2019

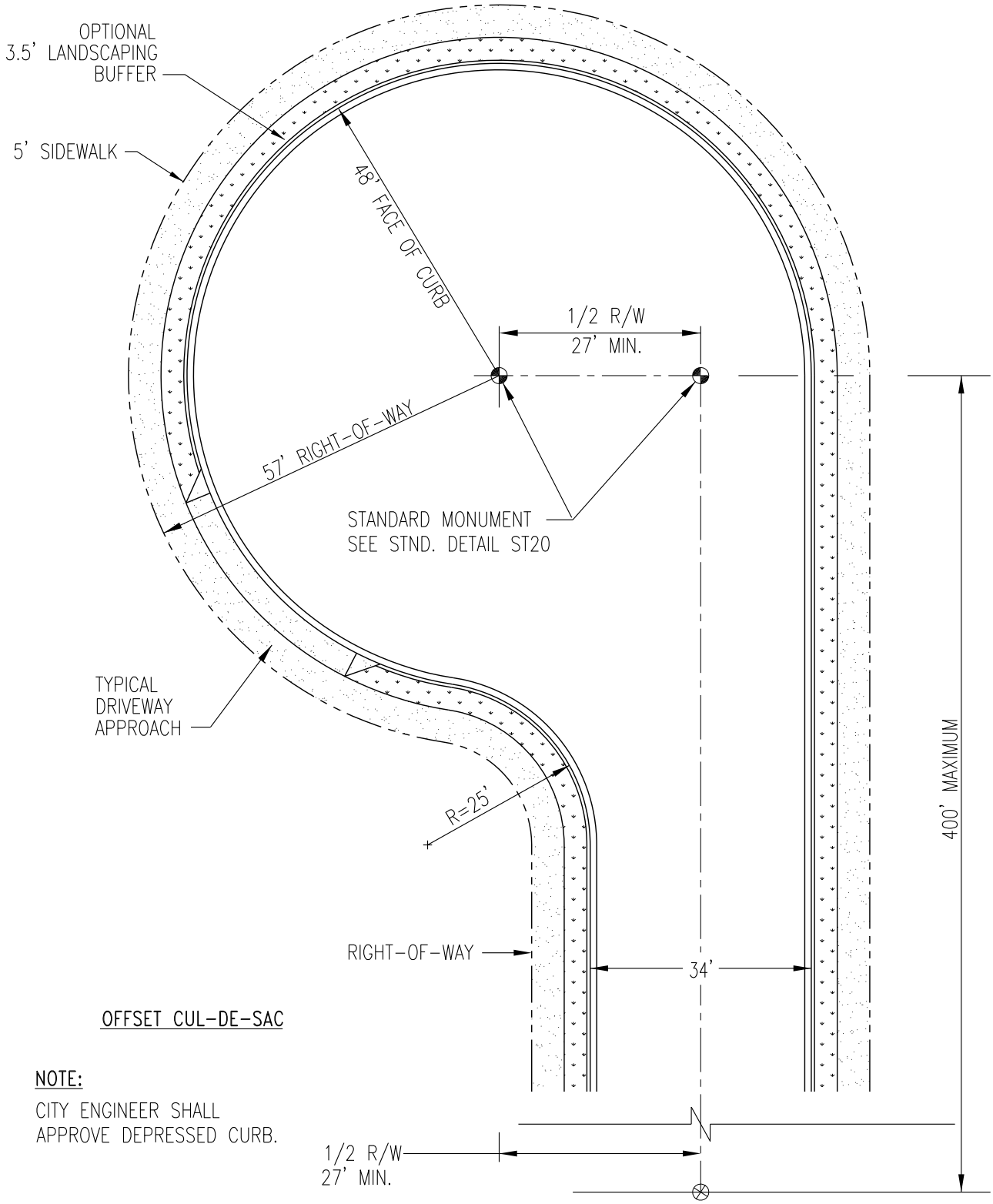

OFFSET CUL-DE-SAC

NOTE:

CITY ENGINEER SHALL
APPROVE DEPRESSED CURB.

STANDARD OFFSET CUL-DE-SAC

PUBLIC WORKS ENGINEERING	
APPR. BY: PKR	DATE: 06.19
DRAWN BY: EY	DWG: ST18
CAD FILE: 2012_ST18_06_2019	

NOTE:

1. USE OF THIS TURN AROUND AT ANY SPECIFIC SITE MUST BE APPROVED BY THE CITY FIRE MARSHALL AND THE CITY ENGINEER.

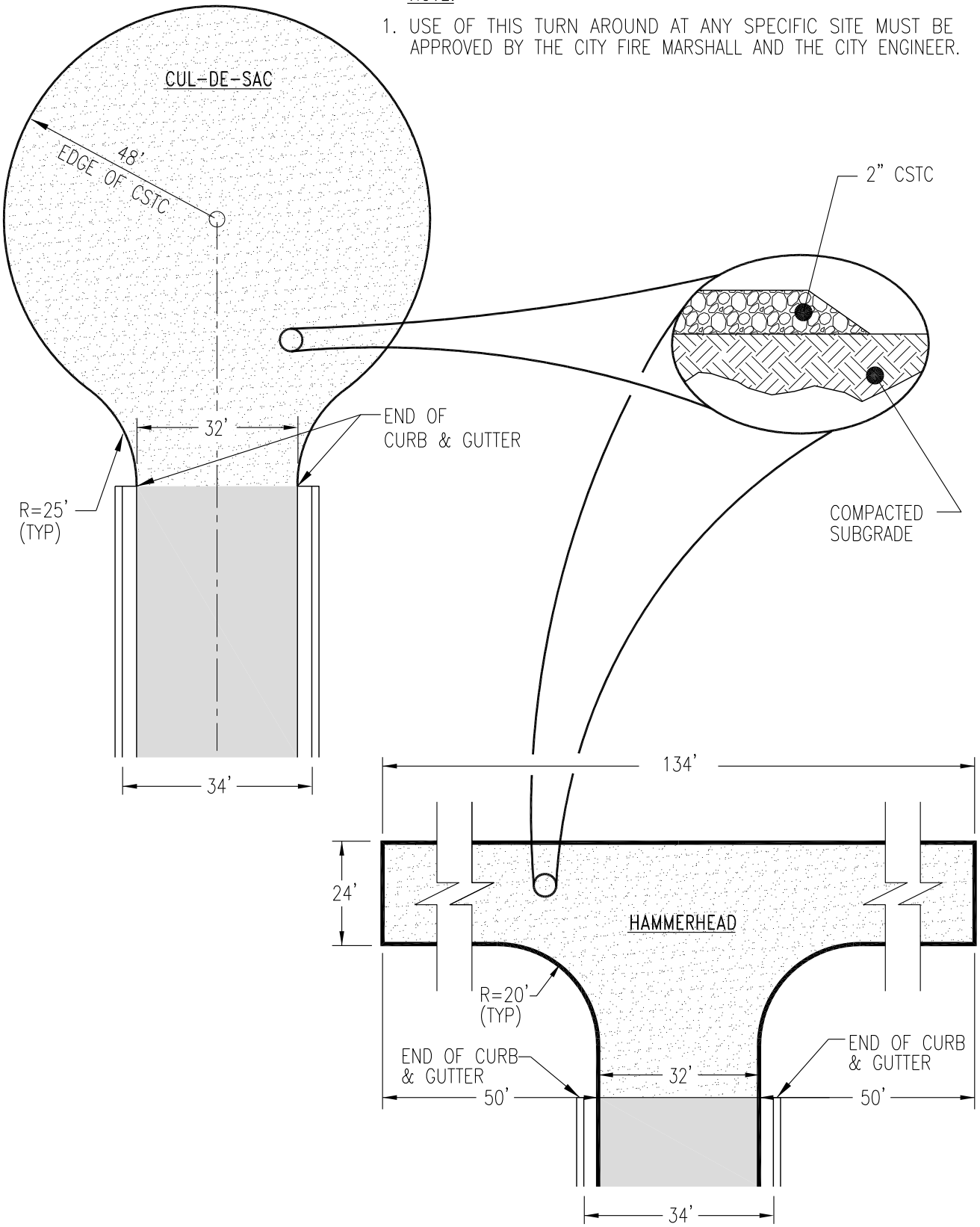

TEMPORARY TURN AROUND

PUBLIC WORKS ENGINEERING	
APPR. BY: PKR	DATE: 06.19
DRAWN BY: LD	DWG: ST19
CAD FILE: 2012_ST19_06_2019	

COVER-PLAN VIEW

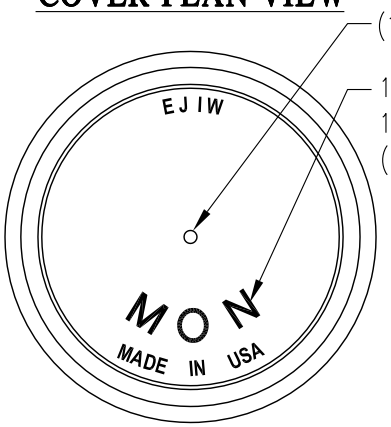

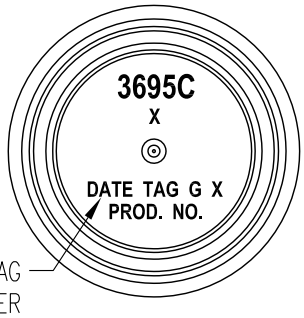

COVER BOTTOM VIEW

SECTION-COVER

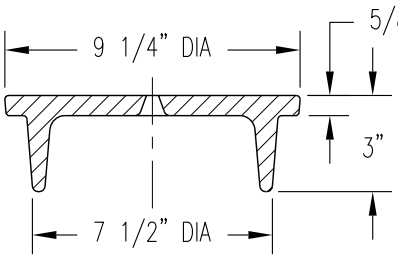

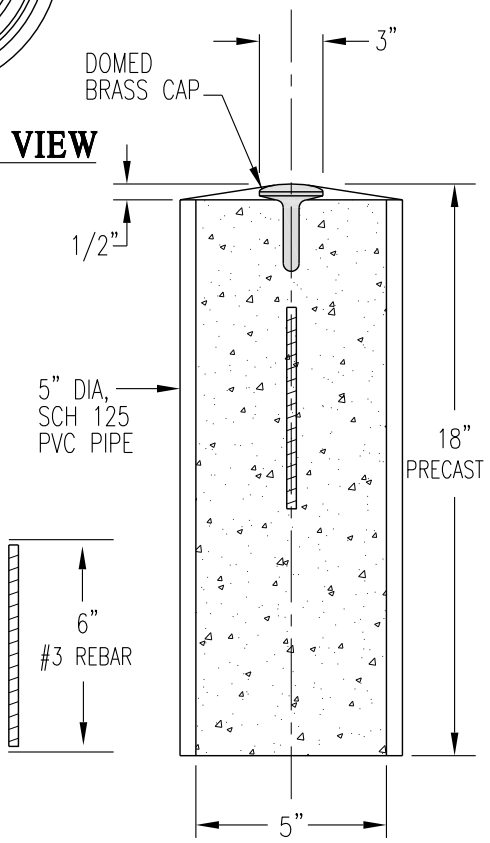

SECTION-FRAME

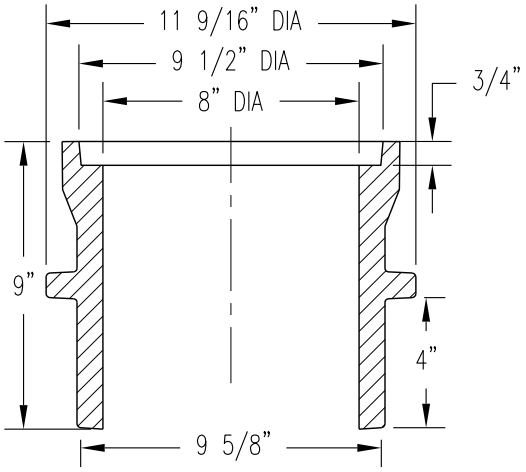

CONCRETE MONUMENT

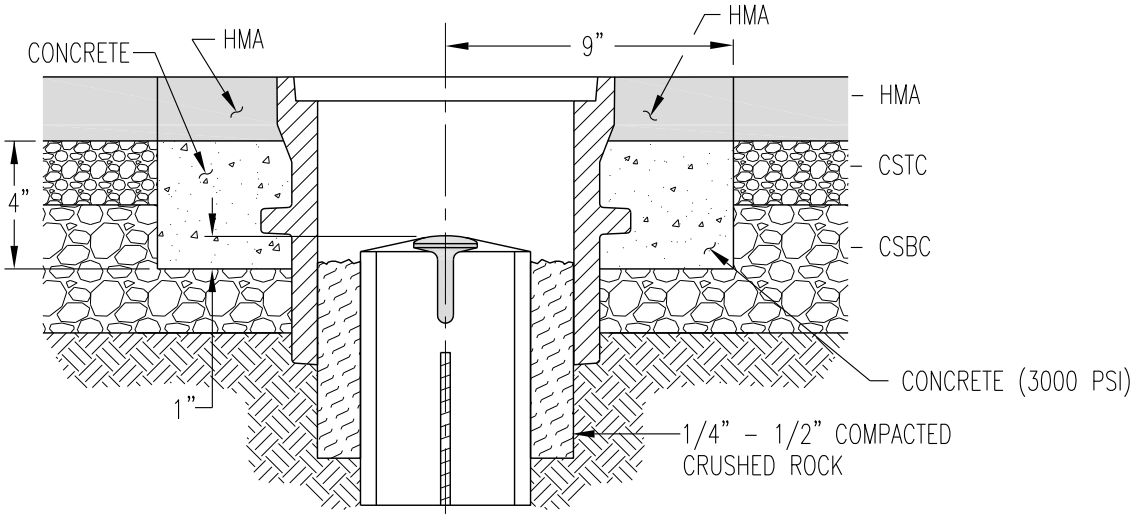

Richland Washington

SURVEY MONUMENT

PUBLIC WORKS ENGINEERING	
APPR. BY: PKR	DATE: 07.17
DRAWN BY: LD	DWG: ST20
CAD FILE: 2013_ST20_07_2017	

	MIN.	MAX.
A	1.60"	2.40"
B	0.65"	–
C	0.45"	0.90"
D	0.9"	1.40"
E	0.2"	0.2"

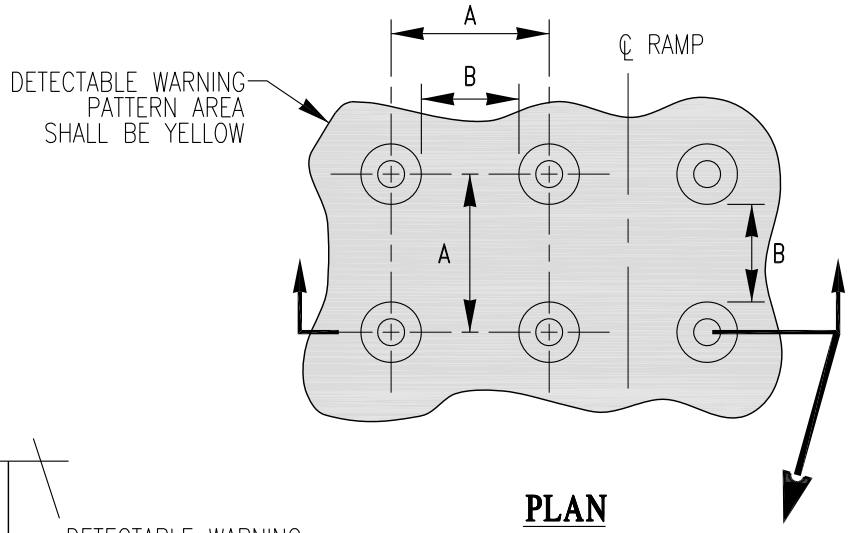

PLAN

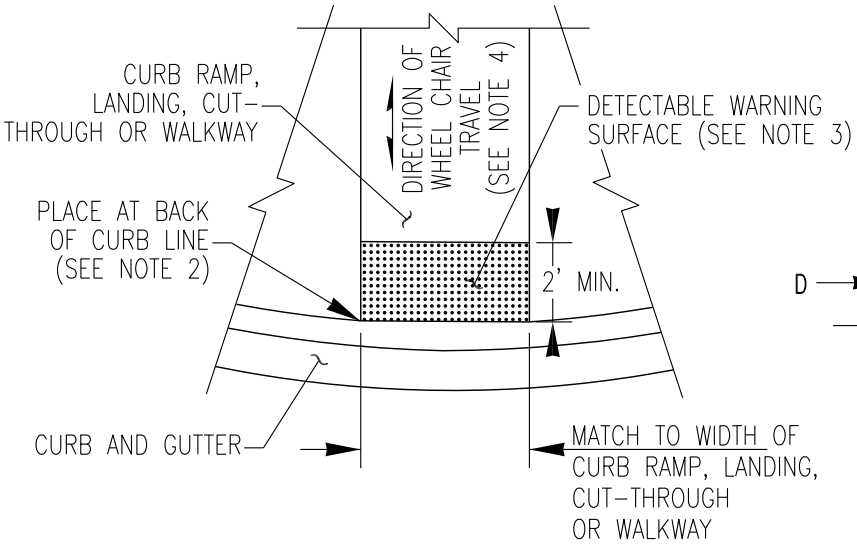

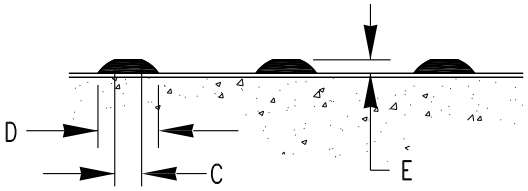

SECTION VIEW

NOTES:

1. THE DETECTABLE WARNING SURFACE SHALL EXTEND THE FULL WIDTH OF THE CURB RAMP (EXCLUSIVE OF FLARES) OR THE LANDING.
2. THE EDGE OF THE DETECTABLE WARNING SURFACE SHALL BE PLACED AT THE BACK OF THE CURB. CURB SHALL BE FORMED TO PROVIDE A STRAIGHT LINE ALONG THE BACK OF CURB ADJACENT TO THE WARNING PATTERN.
3. THE ROWS OF TRUNCATED DOMES SHALL BE ALIGNED TO BE PERPENDICULAR TO THE GRADE BREAK AT THE BACK OF CURB.
4. THE ROWS OF TRUNCATED DOMES SHALL BE ALIGNED TO BE PARALLEL TO THE DIRECTION OF TRAVEL.
5. SEE STANDARD PLANS FOR SIDEWALK AND CURB RAMP DETAILS.
6. IF CURB AND GUTTER ARE NOT PRESENT, SUCH AS A SHARED-USE PATH CONNECTION, THE DETECTABLE WARNING SURFACE SHALL BE PLACED AT THE PAVEMENT EDGE.

Richland Washington

DETECTABLE WARNING SURFACE

PUBLIC WORKS ENGINEERING	
APPR. BY: PKR	DATE: 01.16
DRAWN BY: LD	DWG: ST21
CAD FILE: 2013_ST21_01_2016	

CULVERT INSTALLATION ALONG
CITY OF RICHLAND STREETS WHERE NO CURB AND GUTTER EXIST

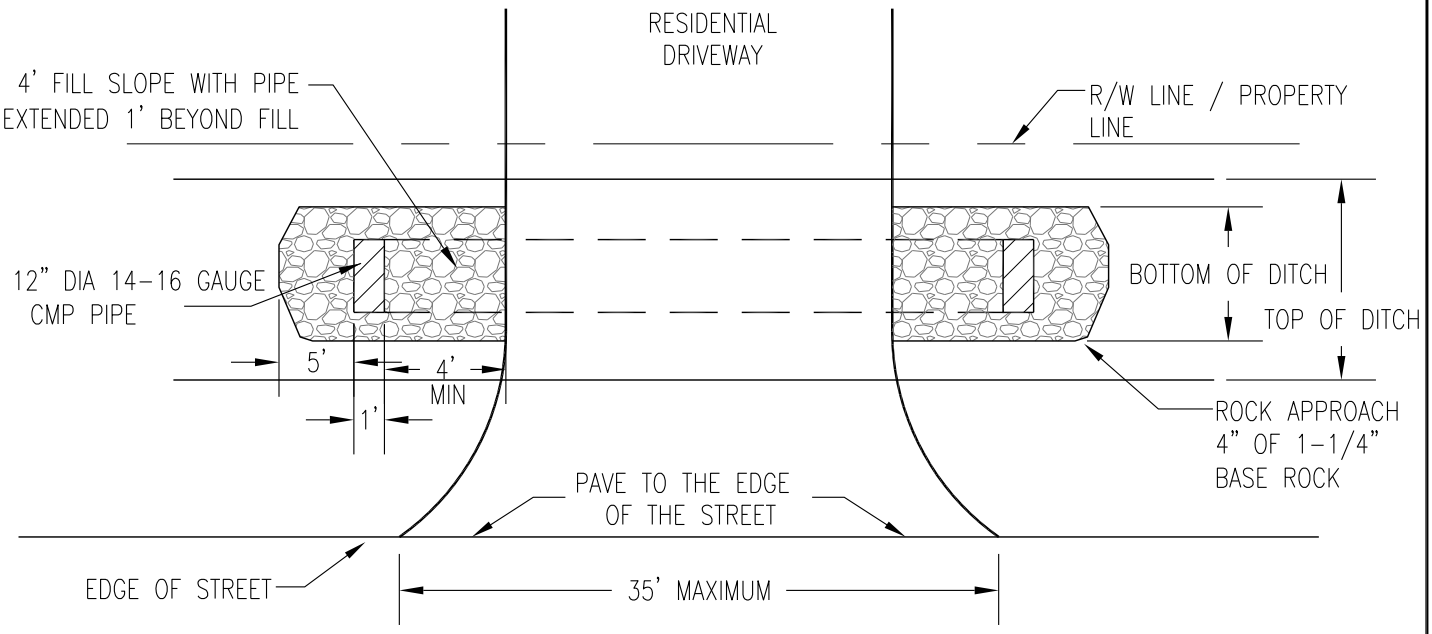

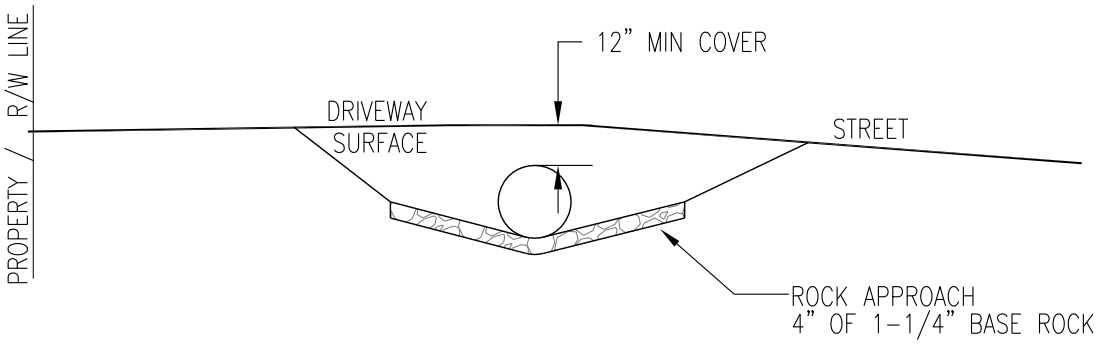

NOTES:

1. CULVERT PIPE SHALL BE 12" EXTRA STRENGTH CMP.
2. SIDE SLOPES OF DITCH SHALL BE 3:1 MAXIMUM.
3. CULVERT INSTALLATION SHALL PASS A CITY PUBLIC WORKS INSPECTION PRIOR TO FINAL ACCEPTANCE.
4. DITCH SHALL BE RE-ESTABLISHED ACROSS THE ENTIRE FRONTAGE PRIOR TO FINAL ACCEPTANCE.

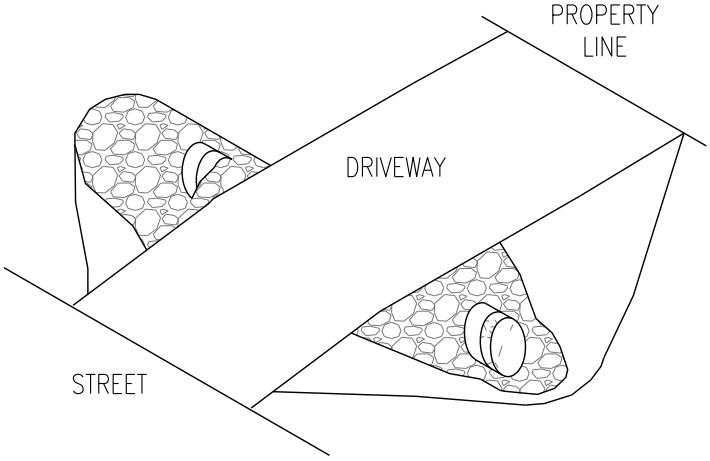

Richland Washington

RURAL DRIVEWAY / CULVERT DETAIL

PUBLIC WORKS ENGINEERING	
APPR. BY: JR	DATE: 02.12
DRAWN BY: JG	DWG: ST22
CAD FILE: 2012_ST22_02_2012	

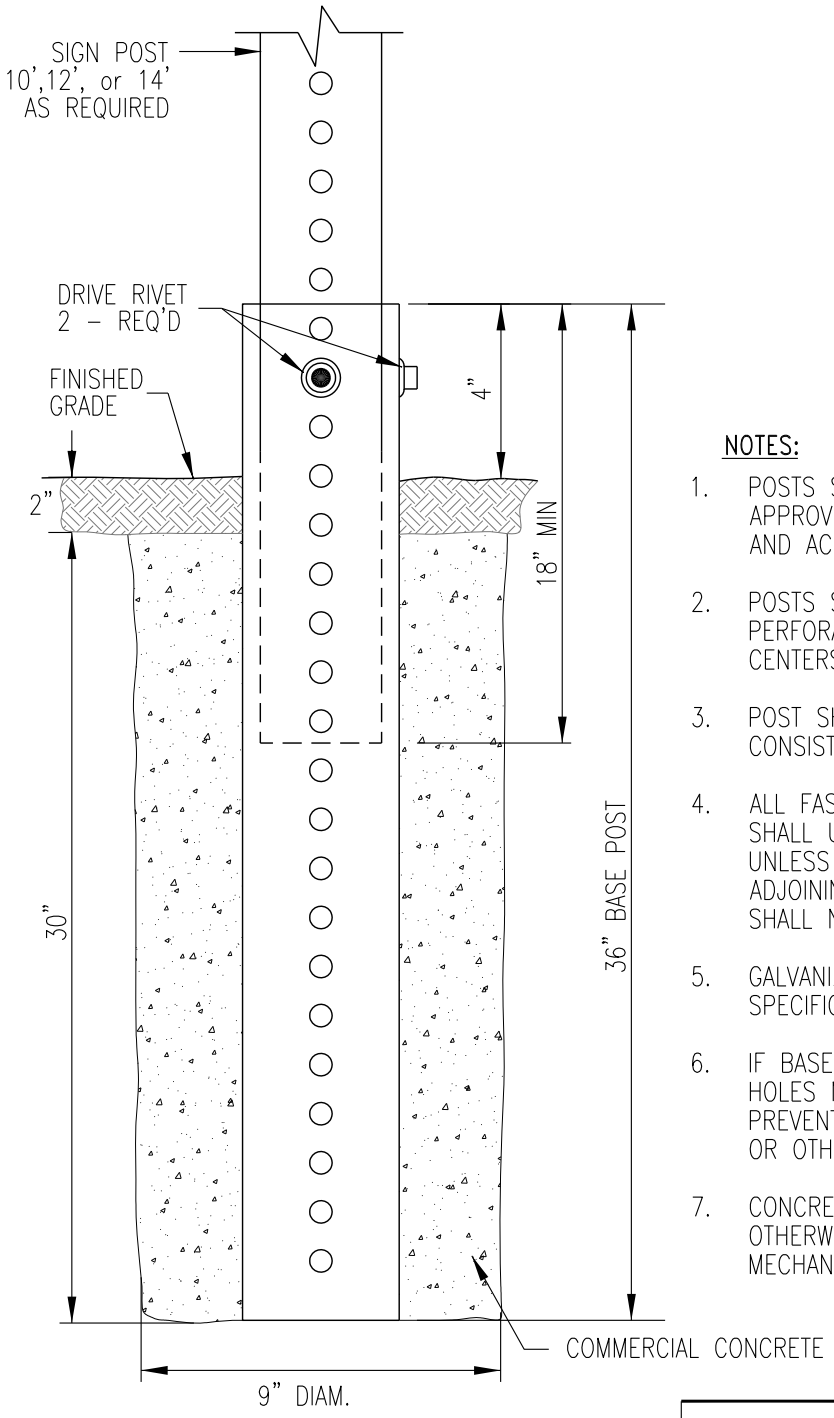

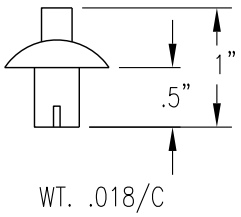

DRIVE RIVET

NOTES:

1. POSTS SHALL BE TELESPAR BRAND SQUARE TUBING OR APPROVED EQUAL. SIGN POST MUST BE BREAK AWAY AND ACCEPTABLE PER NCHRP 350.
2. POSTS SHALL BE COLD ROLLED STEEL WITH PERFORATION OF .4375 INCH DIAMETER ON ONE INCH CENTERS ON ALL FOUR SIDES.
3. POST SHALL EMPLOY A YIELDING BREAKAWAY SYSTEM CONSISTING OF A BASE POST AND SIGN POST.
4. ALL FASTENINGS OF TUBING JOINTS AND CONNECTIONS SHALL UTILIZE A MINIMUM OF TWO DRIVE RIVETS UNLESS OTHERWISE SPECIFIED. RIVETS SHALL BE ON ADJOINING FACES OF POST NOT OPPOSITE SIDES AND SHALL NOT USE WASHERS.
5. GALVANIZED COATING SHALL CONFORM TO A.S.T.M. SPECIFICATION A-525, DES. G-90.
6. IF BASE THAT IS USED HAS CONTINUOUS HOLES, THE HOLES MUST BE COVERED PRIOR TO INSTALLATION TO PREVENT THE BASE FROM BEING FILLED WITH CONCRETE OR OTHER MATERIAL.
7. CONCRETE POURED BASES SHALL BE USED UNLESS OTHERWISE APPROVED BY THE TRAFFIC ENGINEER (e.g. MECHANICALLY DRIVEN).

PART	TUBE SIZE	MIN. WALL THICKNESS	LENGTH
BASE POST	2.25" x 2.25"	12 GAGE	36 INCH
SIGN POST	2" x 2"	12 GAGE	10',12', or 14' AS REQ'D.

Richland Washington

TYPICAL SIGN POST

PUBLIC WORKS ENGINEERING	
APPR. BY: PKR	DATE: 06.18
DRAWN BY: EY	DWG: ST23
CAD FILE: 2018_ST23_06_2018	

Standard Details
Street Lighting

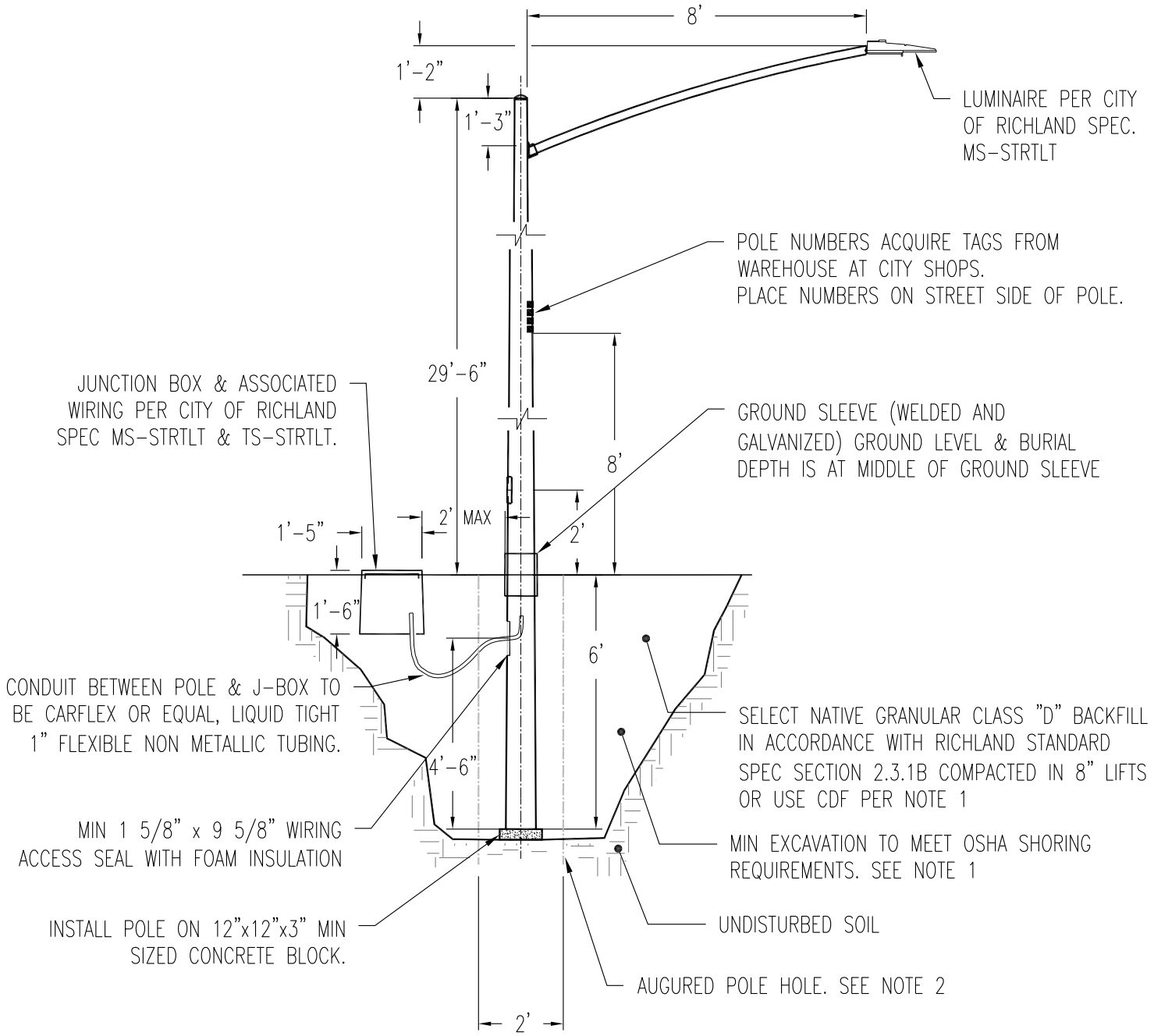

NOTES:

1. THE USE OF CONTROLLED DENSITY FILL (CDF) OR LEAN CONCRETE OR CRUSHED 5/8" TOP COURSE GRAVEL IS ACCEPTABLE AND MAY BE USED FOR BACKFILL. IF SOIL BACKFILL IS USED, THE BACKFILL SHOULD MEET RICHLAND STANDARD SPECIFICATION SECTION 2.3.1B AND BE COMPACTED IN 8" LIFTS. IN-PLACE DENSITY TESTS SHOULD BE PERFORMED AT NOT MORE THAN 1 FT. INTERVALS TO DETERMINE COMPACTION. COMPACTION SHOULD MEET ASTM D-698. TO ACHIEVE THE FULL STRENGTH WIND LOADING, THE EXCAVATED AREA SHOULD BE AT LEAST 4 FT ON EACH SIDE. BECAUSE THE DEPTH OF THE EXCAVATION IS GREATER THAN 4 FT. ON EACH SIDE. BECAUSE THE DEPTH OF THE EXCAVATION IS GREATER THAN 4 FT., THE EXCAVATION WALLS MUST BE SLOPED AS REQUIRED BY STATE & FEDERAL REGULATIONS, IF PERSONNEL WILL BE REQUIRED TO ENTER THE EXCAVATION.

2. IF HOLES ARE AUGURED THEN AN ABSOLUTE MIN. OF A 24" DIA. AUGER MUST BE USED. BACKFILL PER NOTE 1.

Richland Washington

STREET LIGHTING DIRECT BURIED POLE 30/40 FT

PUBLIC WORKS ENGINEERING	
APPR. BY: PKR	DATE: 11.15
DRAWN BY: LD	DWG: SL-1
CAD FILE: 2015_SL1_11_2015	

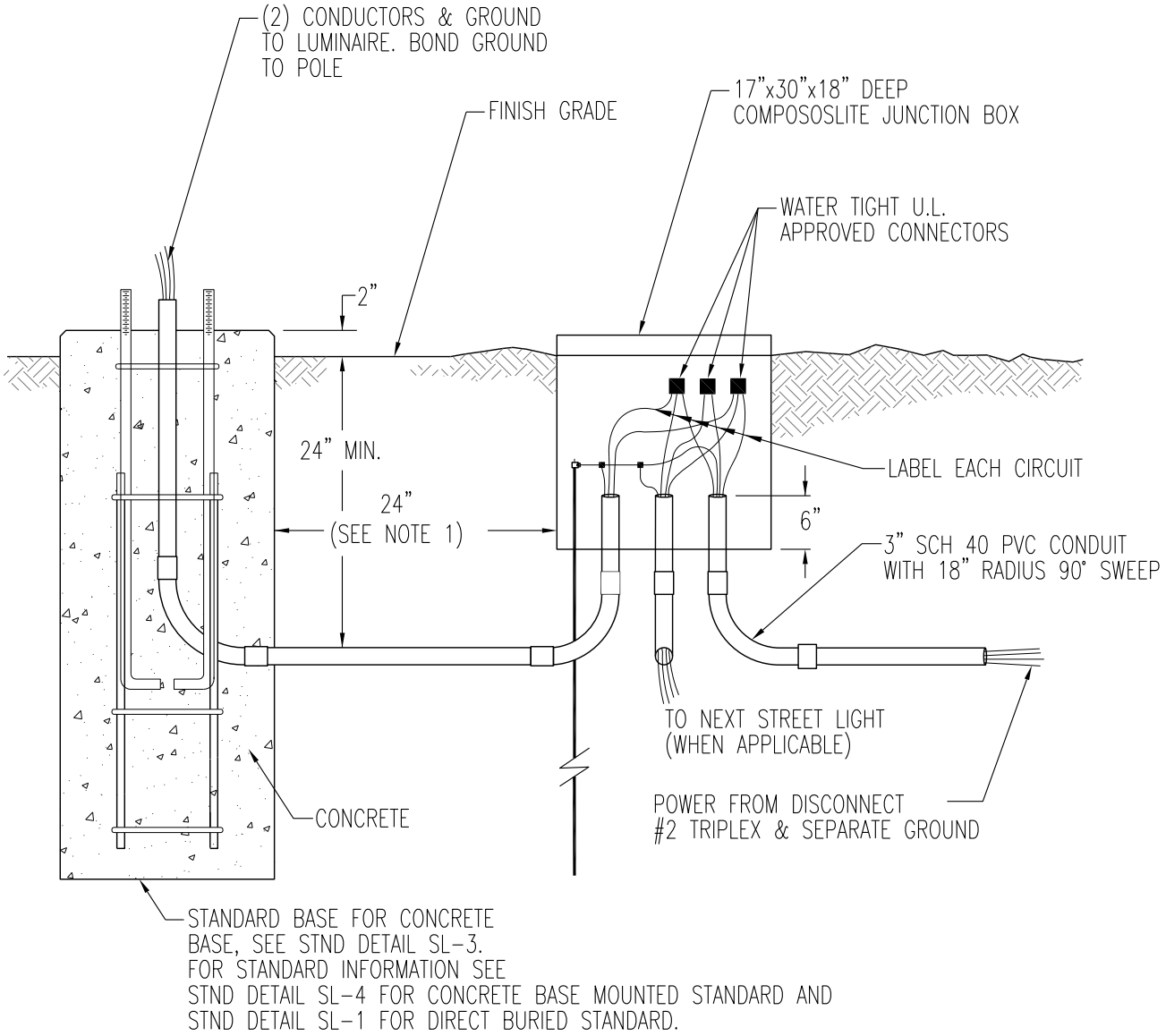

NOTES:

1. SET JUNCTION BOX IN THE PROPER LOCATION SUCH THAT IT IS AS LITTLE OVER 24" FROM STREET LIGHT FOUNDATION AS POSSIBLE. SOIL UNDER BOX SHALL BE RESTORED TO 95% COMPACTION. SET BOX AT AN ELEVATION SUCH THAT THE TOP OF THE BOX COVER IS APPROXIMATELY 2" ABOVE FINISHED GRADE UNLESS BOX IS TO BE SURROUNDED BY ASPHALT OR CONCRETE. SET BOX LEVEL WITH AND PARALLEL TO STREET.

2. SWEEP CONDUIT UP INTO JUNCTION BOX A MINIMUM OF 6". INSTALL BELL ENDS OR BUSHINGS ON ALL EXPOSED CONDUIT ENDS IN JUNCTION BOX.

3. ALLOW SUFFICIENT SLACK IN CONDUCTORS SUCH THAT SPLICES MAY BE REMOVED A MINIMUM OF 36" FROM SPLICE BOX.

4. JUNCTION BOXES SHALL BE COMPOSOLITE AS MANUFACTURED BY QUAZITE CORPORATION OR APPROVED EQUAL. BOXES SHALL BE CONCRETE GRAY COLOR IN APPEARANCE. COVER SHALL UTILIZE A PENTA-HEAD BOLD TO SECURE IT TO BOX. THE COVER SHALL HAVE THE LOGO "ELECTRICAL" PERMANENTLY MARKED ON IT.

Richland Washington

STREET LIGHTING JUNCTION BOX & MOUNTING BASE

PUBLIC WORKS ENGINEERING	
APPR. BY: PKR	DATE: 11.15
DRAWN BY: LD	DWG: SL-2
CAD FILE: 2015_SL2_11_2015	

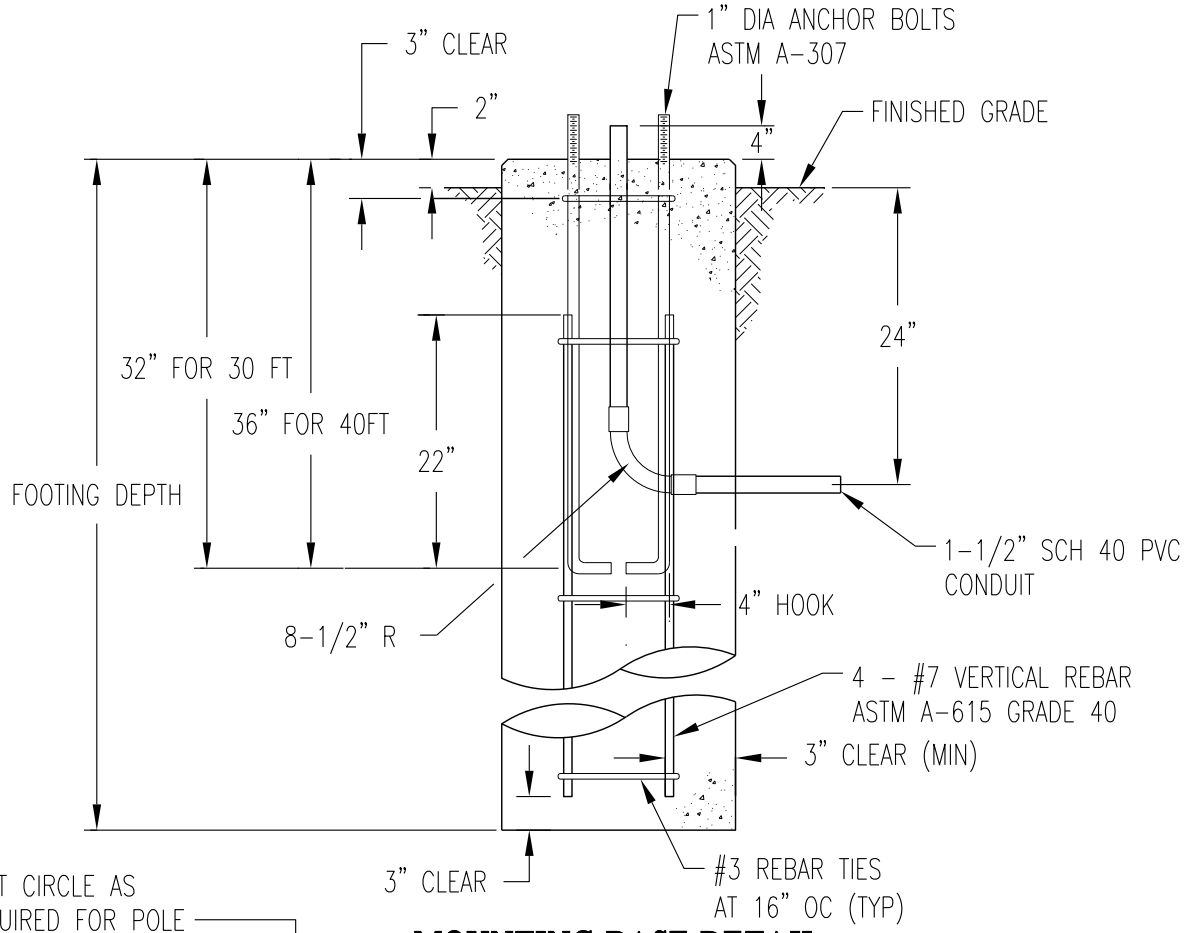

MOUNTING BASE DETAIL

NOTE:
CONCRETE STRENGTH = 4000 PSI CONCRETE CLASS 4000P.
CONCRETE STRENGTH = 2400 PSI PRIOR TO SETTING POLE.

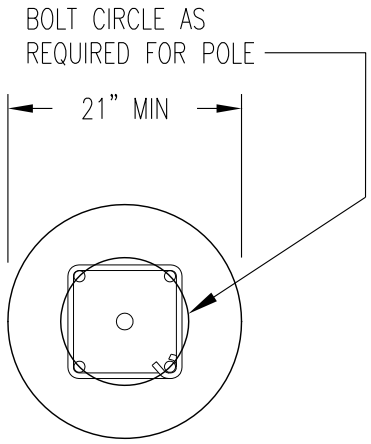

MOUNTING BASE TOP VIEW

POLE LENGTH (FEET)	MINIMUM FOOTING DEPTH IN FEET SEE SOIL TABLE		
	A	B	C
30	5'0"	6'6"	8'0"
40	5'6"	7'0"	8'6"

SOIL TYPE	CLASS OF MATERIAL (UNIFORM BUILDING CODE)
A	GOOD-COMPACT WELL-GRADED SAND AND GRAVEL. HARD CLAY WELL-GRADED FINE AND COARSE SAND (ALL DRAINED SO WATER WILL NOT STAND)
B	AVERAGE-COMPACT FINE SAND MEDIUM CLAY COMPACT SANDY LOAM LOOSE COARSE SAND AND GRAVEL (ALL DRAINED SO WATER WILL NOT STAND.)
C	POOR-SOFT CLAY CLAY LOAM POORLY COMPACTED SAND CLAYS CONTAINING LARGE AMOUNTS OF SILT (WATER STANDS DURING WET SEASON)

NOTE:

FORMING MATERIALS (SONOTUBE) SHALL BE REMOVED FROM THE TOP OF THE FOUNDATION TO SIX INCHES BELOW FINISHED GRADE AFTER CONCRETE HAS HAD A CHANCE TO SET UP.

SOIL BELOW MOUNTING BASE TO BE UNDISTURBED.

Richland Washington

STREET LIGHTING MOUNTING BASE DETAILS CONCRETE SUPPORT

PUBLIC WORKS ENGINEERING	
APPR. BY: PKR	DATE: 11.15
DRAWN BY: LD	DWG: SL-3
CAD FILE: 2015_SL3_11_2015	

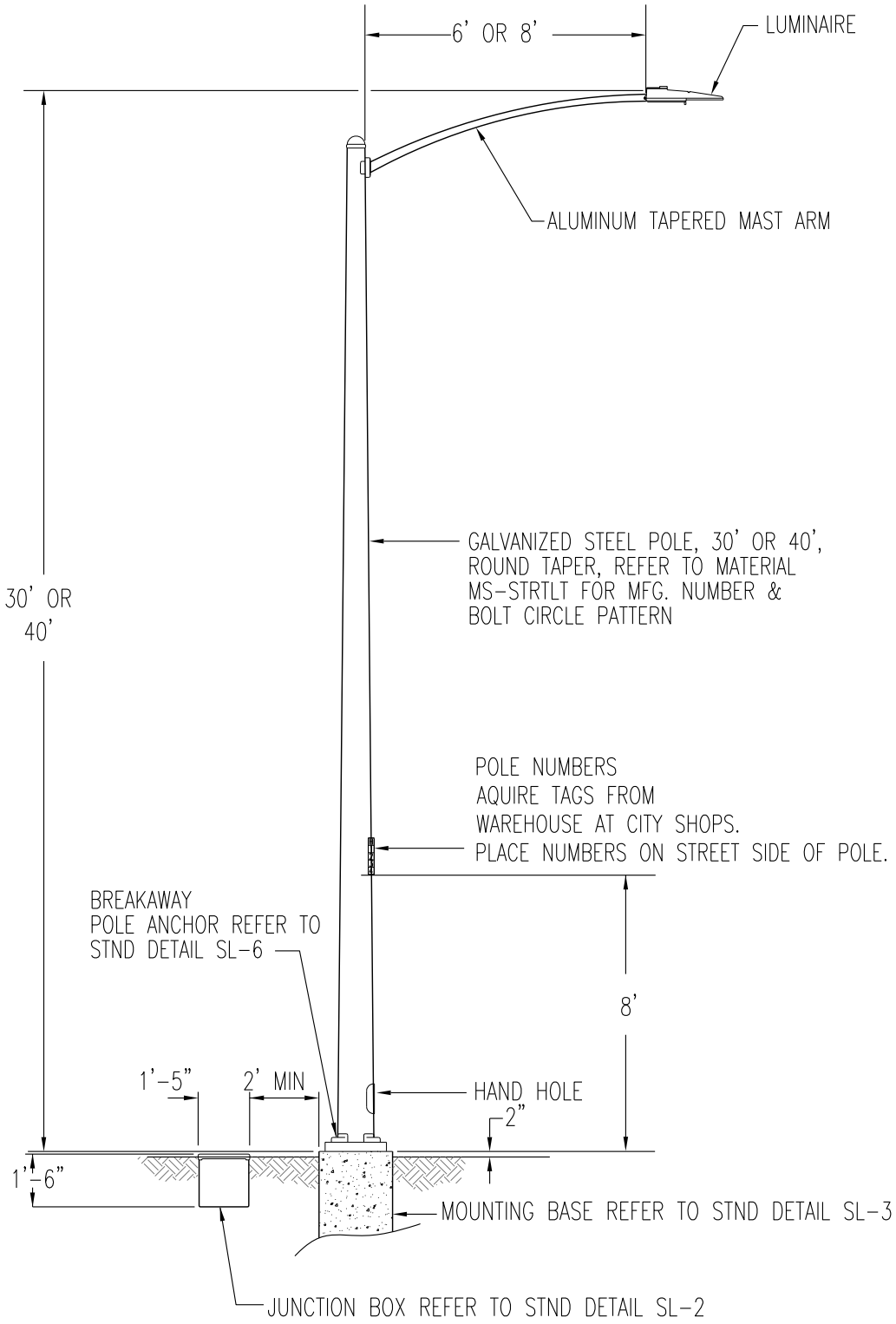

SEE TECHNICAL SPECIFICATION TS-STRTLT FOR DESIGN INFORMATION
SEE MATERIAL SPECIFICATION MS-STRTLT FOR MANUFACTURING AND MATERIALS INFORMATION

Richland Washington	STREET LIGHTING STEEL POLE 30/40FT CONCRETE BASE	PUBLIC WORKS ENGINEERING
		APPR. BY: PKR — DATE: 11.15
		DRAWN BY: LD — DWG: SL-4
		CAD FILE: 2015_SL4_11_2015

NOTES:

1. IF POWER SOURCE IS OVERHEAD POWER LINE EXTEND CONDUIT TO WITHIN 1' OF CITY POLE AND LEAVE APPROXIMATELY 50' OF #2 ALUM TPX HANGING OUT OF CONDUIT FOR CITY CONNECTION. IF POWER SOURCE IS A PAD MOUNT TRANSFORMER OR UNDERGROUND JUNCTION BOX, EXTEND CONDUIT INTO VAULT OR JUNCTION BOX WITH CITY OVERSIGHT AND LEAVE 5' OF #2 ALUM TPX FOR CITY CONNECTION.

2. CITY OF RICHLAND TO PROVIDE POWER SOURCE CONNECTIONS.

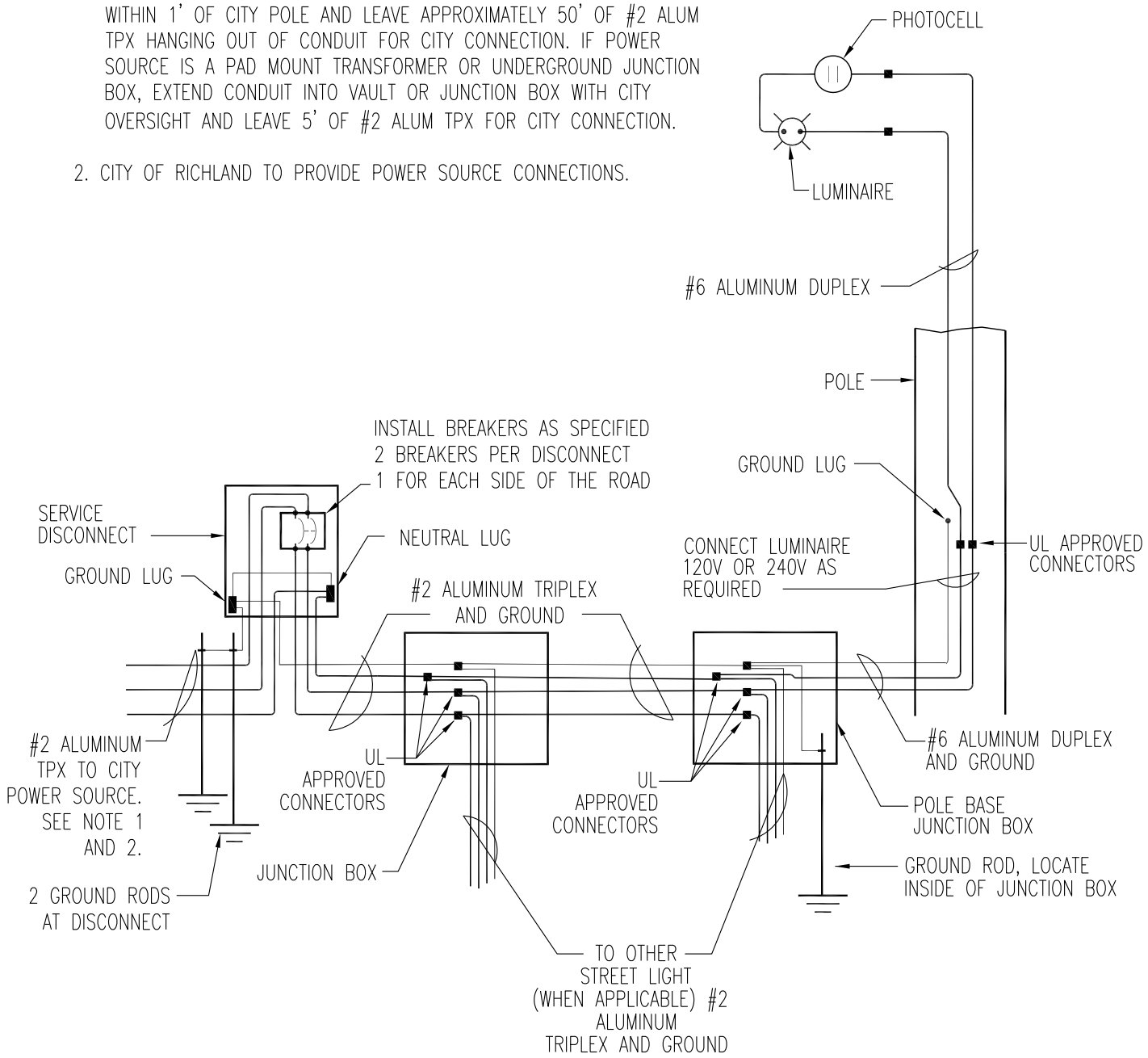

Richland Washington

STREET LIGHTING WIRING DIAGRAM

PUBLIC WORKS ENGINEERING	
APPR. BY: PKR	DATE: 07.17
DRAWN BY: LD	DWG: SL-5
CAD FILE: 2015_SL5_07_2017	

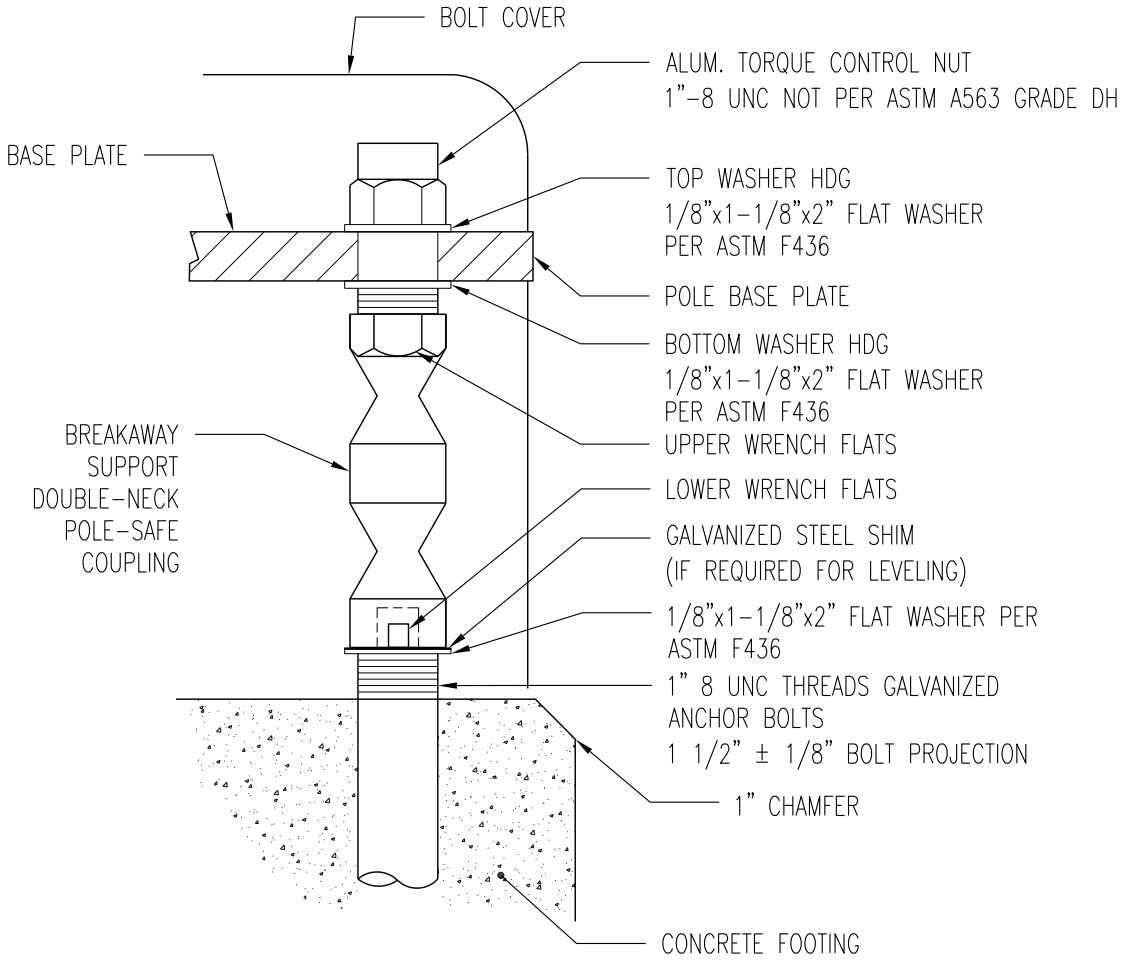

BREAKAWAY POLE ANCHOR DETAIL

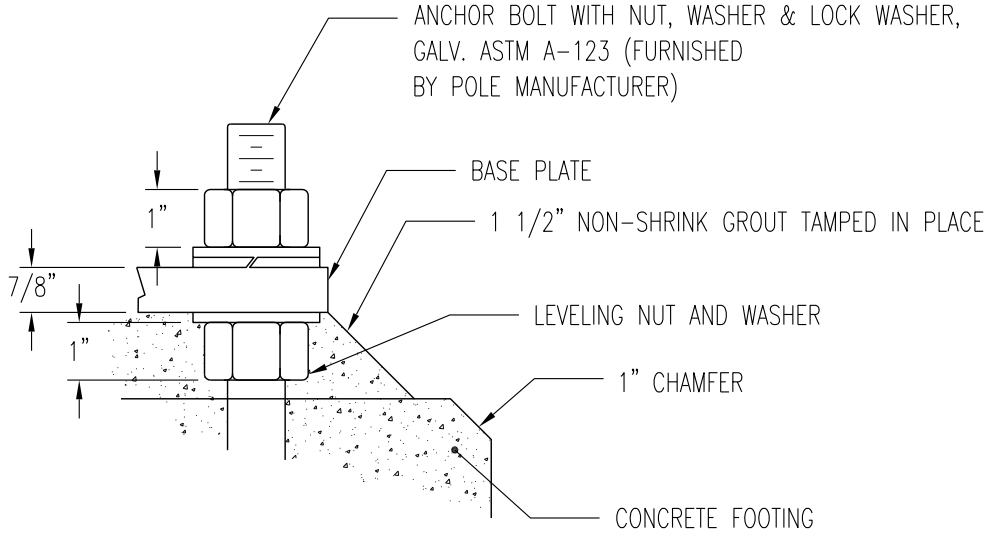

NON-BREAKAWAY ANCHOR DETAIL

Richland Washington	STREET LIGHTING POLE ANCHOR CONCRETE SUPPORT	PUBLIC WORKS ENGINEERING
		APPR. BY: PKR — DATE: 07.17
		DRAWN BY: LD — DWG: SL-6
		CAD FILE: 2015_SL6_07_2017

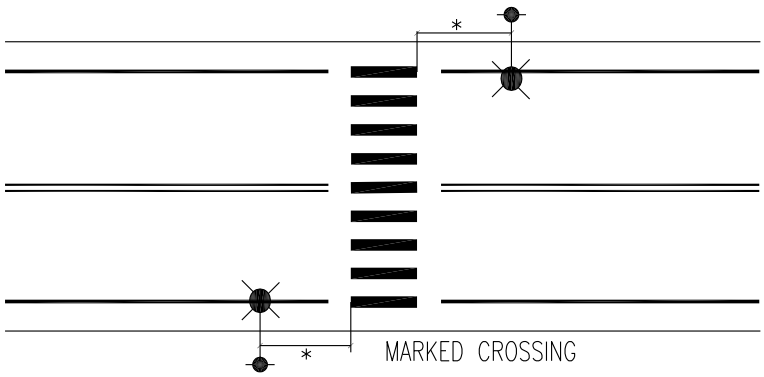

MIDBLOCK CROSSWALK LIGHTING

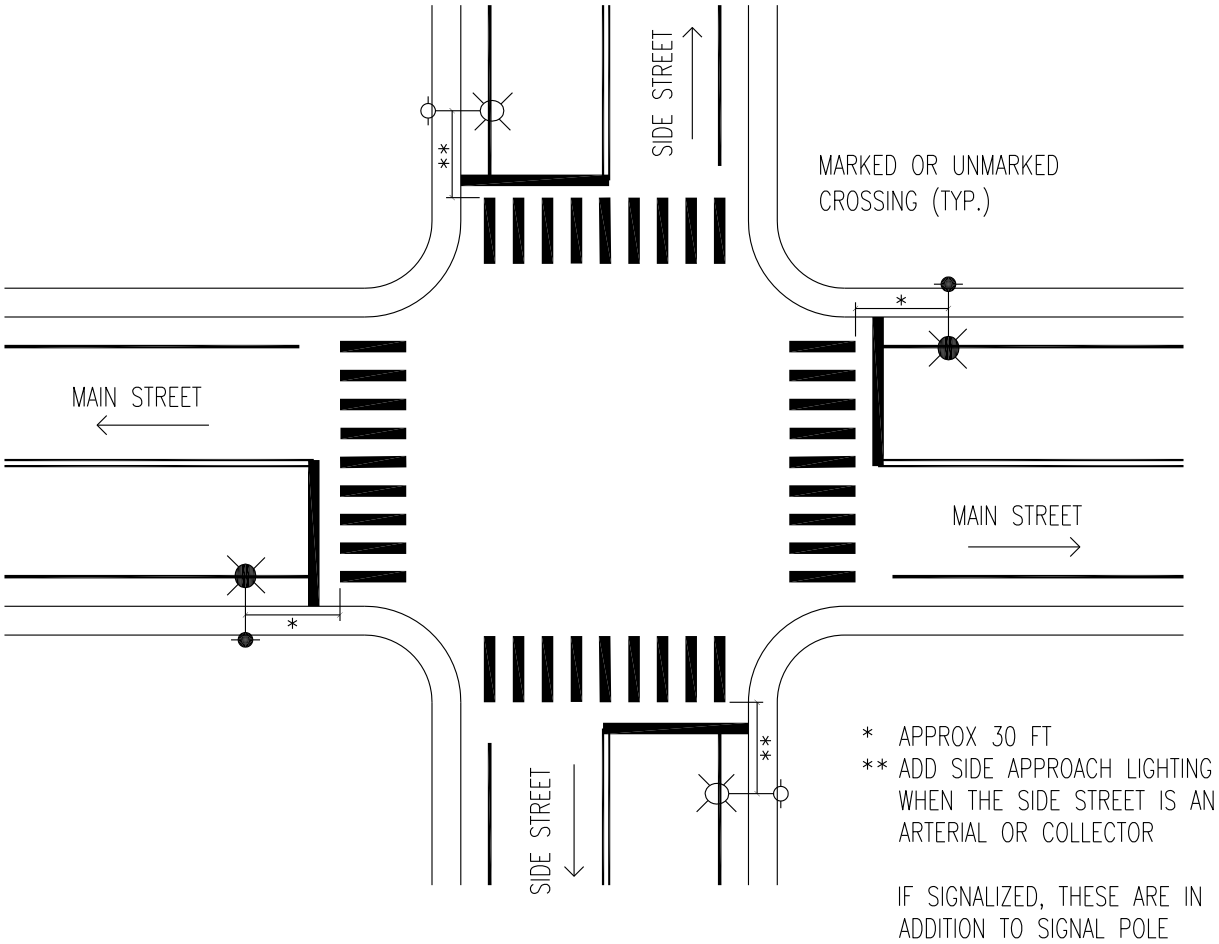

INTERSECTION LIGHTING

Richland Washington

MIDBLOCK LIGHTING
INTERSECTION LIGHTING

PUBLIC WORKS ENGINEERING	
APPR. BY: PKR	DATE: 05.20
DRAWN BY: EY	DWG: SL-7
CAD FILE: 2020_SL7_05_2020	

STREET LIGHT DESIGN CRITERIA

City of Richland Street Light Design Criteria		Roadway Classification											
		Principal Arterial Roadway			Minor Arterial Roadway			Collector Roadway			Local Street		
Pedestrian Conflict Area		High	Medium	Low	High	Medium	Low	High	Medium	Low	High	Medium	Low
Average Maintained Luminance (cd/m²)		1.2	0.9	0.6	1.2	0.9	0.6	0.8	0.6	0.4	0.6	0.5	0.3
Luminance Uniformity	Ave/Min	3.0	3.0	3.5	3.0	3.0	3.5	3.0	3.5	4.0	6.0	6.0	6.0
	Max/Min	5.0	5.0	6.0	5.0	5.0	6.0	5.0	6.0	8.0	10.0	10.0	10.0
Average Maintained Illuminance for curved roadway sections (fc)†		1.7	1.3	0.9	1.7	1.3	0.9	1.2	0.9	0.6	0.9	0.7	0.4
Illuminance Uniformity	Ave/Min	3.0	3.0	3.0	3.0	3.0	3.0	4.0	4.0	4.0	6.0	6.0	6.0
Site Characteristics	Maximum Pole spacing for LED Lighting (ft)‡	180	220	280	150	200	300	220	280	340	210	260	350
	Setback (ft)	8			8			8 or 2.5			8 or 2.5		
	Configuration	Staggered* or Opposite			Staggered* or Opposite			Staggered*			Staggered*		
LED Luminaire Characteristics	Luminaire Distribution	III			II			II			II		
	Max Fixture Wattage	270			170			110			70		
	Color Temperature	4100K (±200)			4100K (±200)			4100K (±200)			4100K (±200)		
	Minimum LLD (100,000 hrs)	0.75			0.75			0.75			0.75		
	Max BUG Rating	B3 U0 G3			B2 U0 G3			B2 U0 G3			B1 U0 G2		
Pole Characteristics	Mounting Height (ft)	38			38			28			28		
	Arm Length (ft)	8 or 12			8 or 12			8			8		

* Staggered spacing measured between luminaires on the *same* side of the road.

† For R2 and R3 Pavement

‡ Maximum spacing requirement may be revised periodically to better reflect the capabilities of new LED lighting technology.

PUBLIC WORKS ENGINEERING

APPR. BY: PKR

DATE: 05.20

DRAWN BY: EY

DWG: SL-8

CAD FILE: 2020_SL8_05_2020

Standard Details
Solid Waste

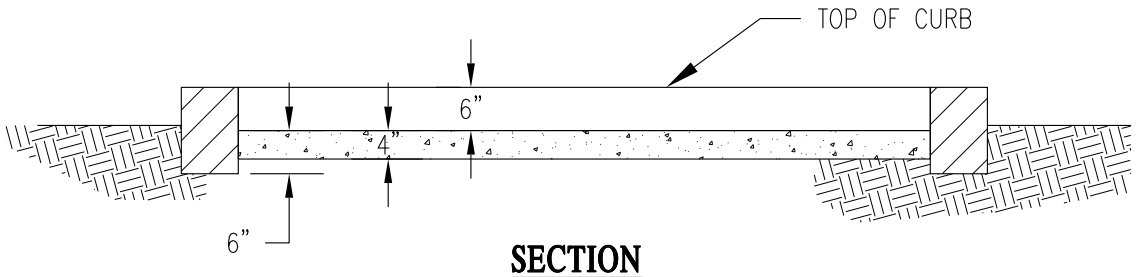

SECTION

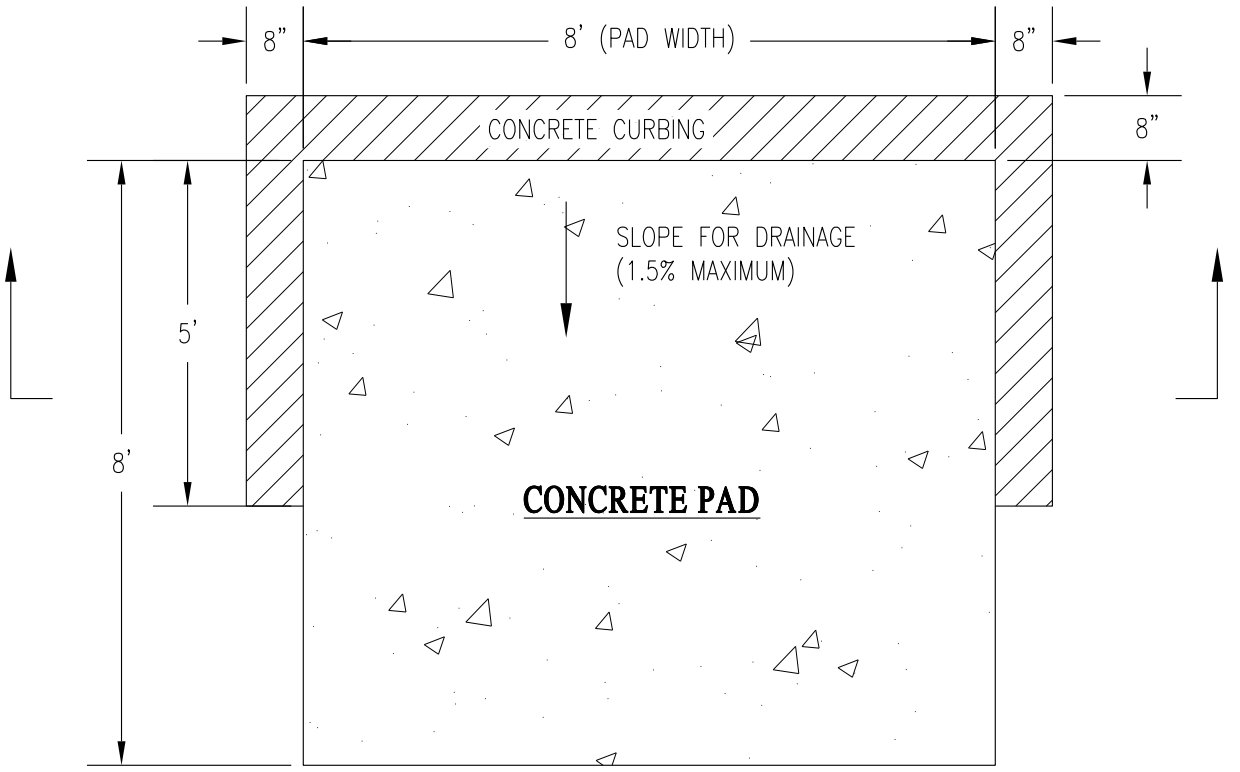

NO
PARKING

WHITE STENCILED
LETTERING
(MINIMUM 12" HIGH)

PLAN

NOTES:

1. CONCRETE FORMS SHALL BE INSPECTED BY CITY OF RICHLAND PUBLIC WORKS PRIOR TO PLACEMENT OF CONCRETE. SEE SPECIFICATIONS FOR SOLID WASTE CONTAINER SITES.

Richland Washington	SOLID WASTE CONTAINER PAD (NO WALLS OR FENCE)	PUBLIC WORKS ENGINEERING
		APPR. BY: JR — DATE: 05.14
		DRAWN BY: JG — DWG: SW1
		CAD FILE: 2014_SW1_05_2014

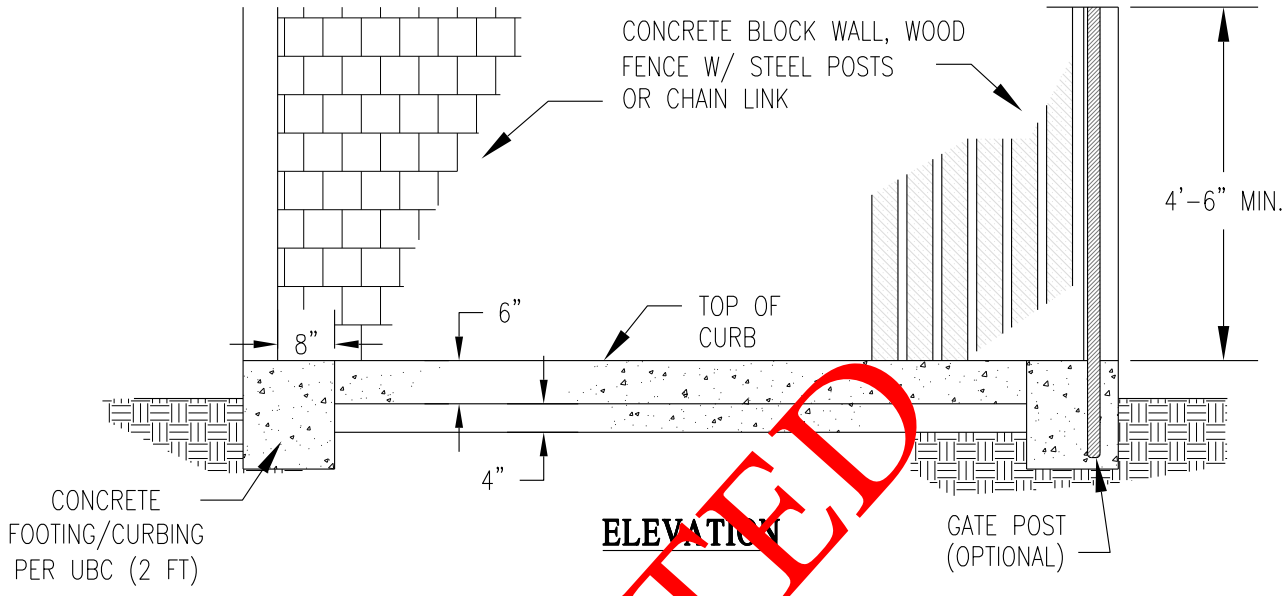

ELEVATION

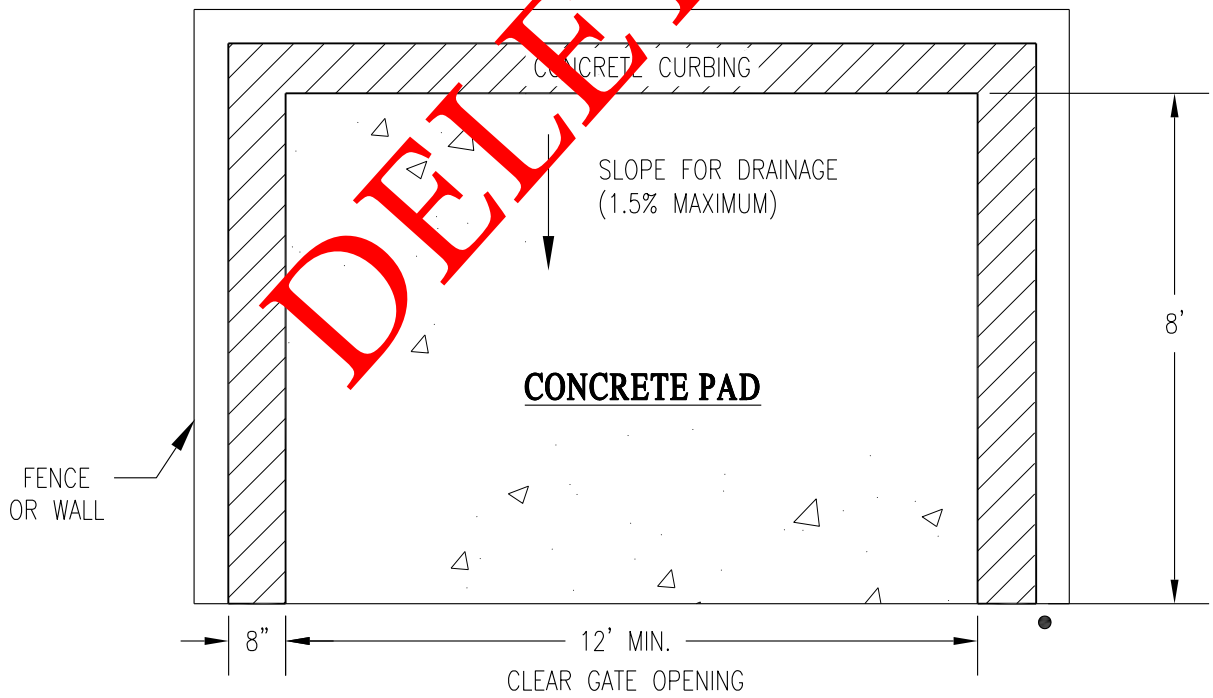

PLAN

NO PARKING

WHITE STENCILED LETTERING (MINIMUM 12" HIGH)

NOTES:

1. CONCRETE FORMS SHALL BE INSPECTED BY CITY OF RICHLAND PUBLIC WORKS PRIOR TO PLACEMENT OF CONCRETE. SEE SPECIFICATIONS FOR SOLID WASTE CONTAINER SITES.

2. GATE SHALL HAVE LATCHES TO HOLD THE GATE IN OPENED POSITION.

DELETED

Richland Washington

OPTIONAL SINGLE SOLID WASTE CONTAINER ENCLOSURE

PUBLIC WORKS ENGINEERING	
APPR. BY: PKR	DATE: 05.14
DRAWN BY: LD	DWG: SW2A
CAD FILE: 2014_SW2A_05_2014	

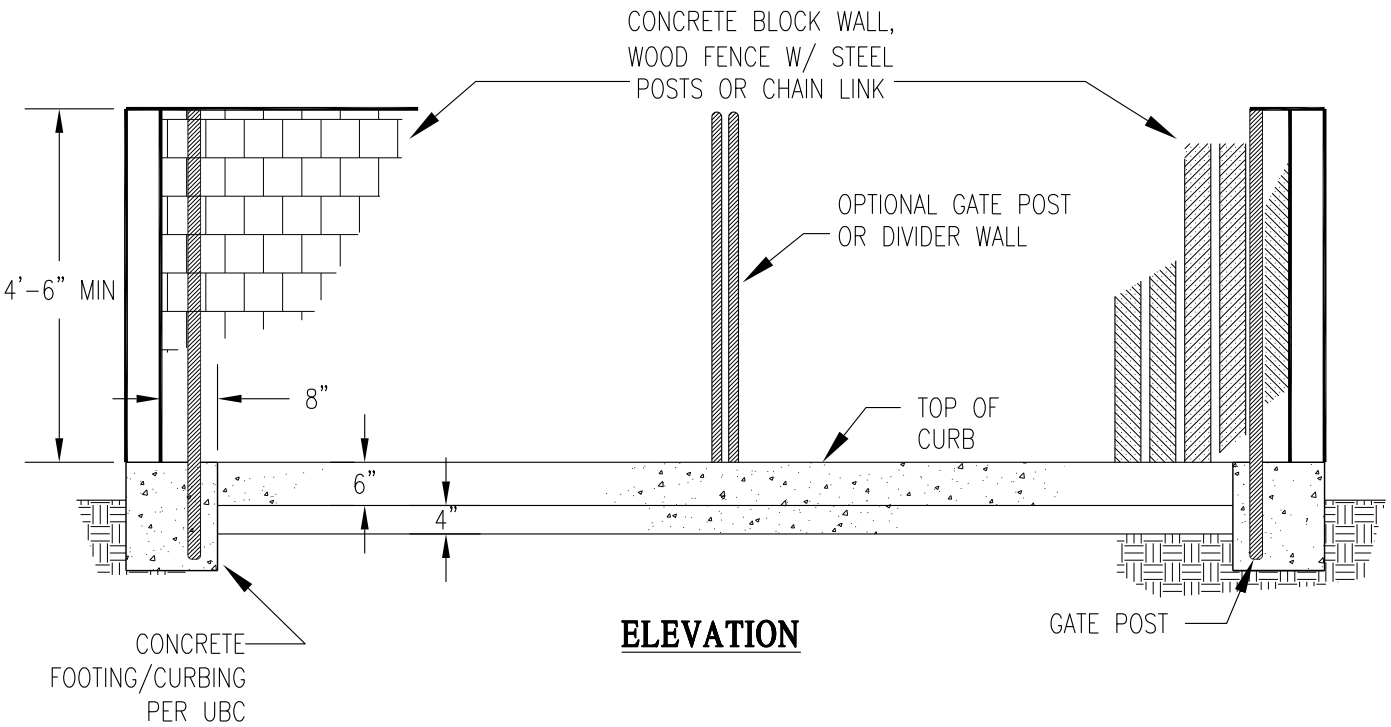

ELEVATION

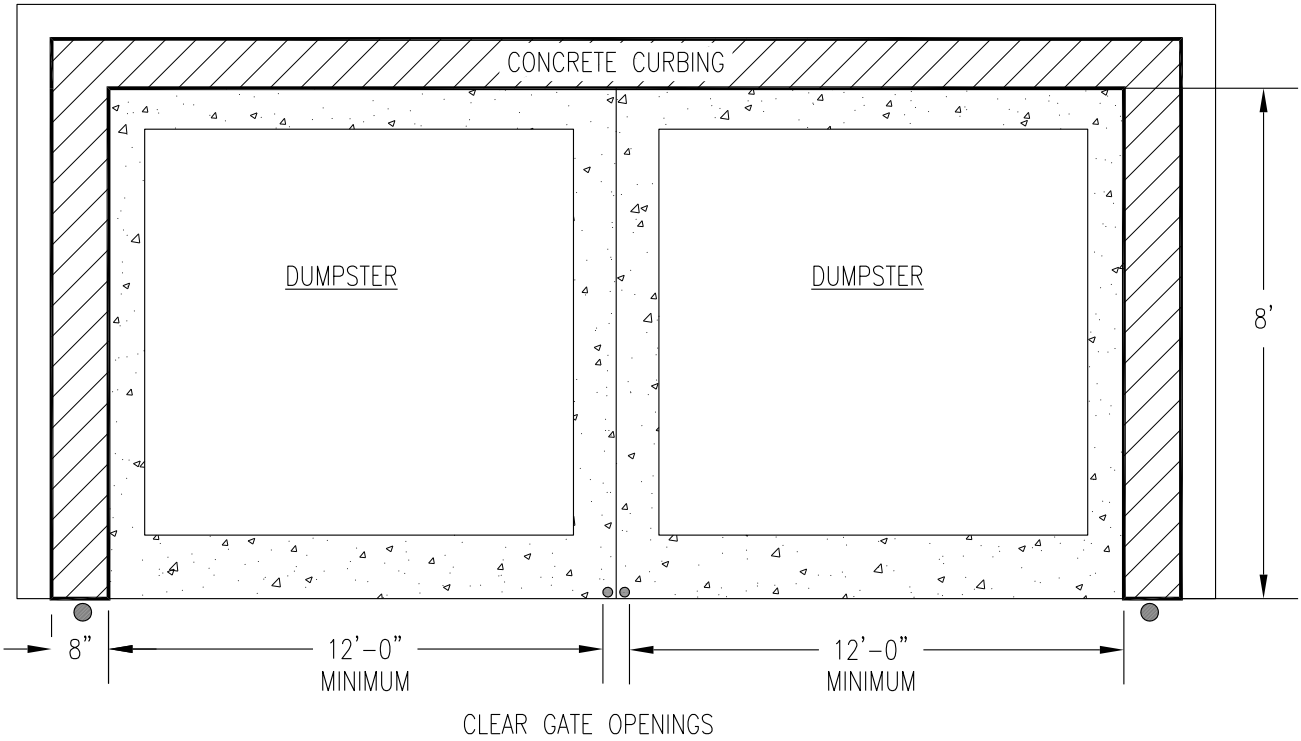

PLAN

NOTES:

1. CONCRETE FORMS SHALL BE INSPECTED BY CITY OF RICHLAND PUBLIC WORKS PRIOR TO PLACEMENT OF CONCRETE. SEE SPECIFICATIONS FOR SOLID WASTE CONTAINER SITES.

Richland Washington

OPTIONAL DOUBLE SOLID WASTE CONTAINER ENCLOSURE

PUBLIC WORKS ENGINEERING	
APPR. BY: JR	DATE: 09.13
DRAWN BY: JG	DWG: SW2B
CAD FILE: 2013_SW2B_09_2013	

STANDARD REQUIREMENTS

1. A FOUR (4) INCH MINIMUM THICK CONCRETE PAD SHALL BE PROVIDED. IN THOSE LOCATIONS WHERE A CONTAINER ENCLOSURE IS NOT DESIRED THE PAD SHALL HAVE A MINIMUM EIGHT (8) FOOT WIDTH AND EIGHT (8) FOOT DEPTH.
2. THE CONCRETE PAD SHALL BE SLOPED TO THE FRONT TO ELIMINATE PONDING WITH A MAXIMUM SLOPE OF 1.5%, OR PROVIDED WITH A DRAIN THRU THE CURBING.
3. A SIX (6) INCH HIGH AND EIGHT (8) INCH WIDE CURB SHALL BE PROVIDED TO THE REAR AND SIDES OF THE PAD. IF A CONTAINER ENCLOSURE IS NOT DESIRED, THE REAR CURBING SHALL RUN ALONG THE FULL WIDTH OF THE PAD, AND THE SIDE CURBING SHALL BE A MINIMUM OF FIVE (5) FEET IN LENGTH FROM THE BACK CURB. (SEE STANDARD DETAIL OF SOLID WASTE CONTAINER PAD, SW1)
4. THE CONCRETE FORMS SHALL BE INSPECTED AND APPROVED BY THE CITY OF RICHLAND PUBLIC WORKS ENGINEERING DEPARTMENT FOR SIZE AND LOCATION PRIOR TO THE PLACEMENT OF ANY CONCRETE.
5. COLLECTION VEHICLES REQUIRE AT LEAST 14 FEET AND 6 INCHES OF VERTICAL CLEARANCE OVER THE ENTIRE APPROACH TO AND FROM THE PAD OR ENCLOSURE. ANY CURVES IN SAID ACCESS SHALL BE 10 FEET WIDE AND SHALL HAVE A MINIMUM OUTSIDE RADIUS OF 35 FEET AND A MINIMUM INSIDE RADIUS OF 25 FEET. NO ADDITIONAL CONTAINERS SHALL BE STORED IN THE ACCESS PATH TO THE DUMPSTER. A GARBAGE TRUCK TURNING RADIUS TEMPLATE IS AVAILABLE FROM CITY OF RICHLAND PUBLIC WORKS ENGINEERING DEPARTMENT UPON REQUEST.
6. A DISTANCE OF NO GREATER THAN 50-FEET SHALL BE REQUIRED FOR CITY COLLECTION VEHICLES TO BACK AWAY FROM WASTE CONTAINER PADS OR ENCLOSURES.
7. THE DRIVEWAY APPROACH TO THE DUMPSTER PAD OR ENCLOSURE SHALL BE A FIRM LEVEL SURFACE OF ASPHALT, CONCRETE OR COMPACTED GRAVEL TO ACCOMMODATE THE WEIGHT OF THE COLLECTION VEHICLES.
8. THE LOCATION OF WASTE CONTAINER PADS AND ENCLOSURES SHALL BE DESIGNED TO MINIMIZE POTENTIAL INJURY TO CITY EMPLOYEES OR THE PUBLIC AND DAMAGE TO PROPERTY FROM WASTE COLLECTION VEHICLES.
9. THE SOLID WASTE CONTAINER PAD OR ENCLOSURE SHALL BE LOCATED A MINIMUM OF FIVE (5) FEET FROM COMBUSTIBLE WALLS, BUILDINGS, OPENINGS OR COMBUSTIBLE ROOF EAVE LINES. THE CONTAINER SHALL NOT BE LOCATED UNDER OVERHEAD WIRES, TREE BRANCHES OR OTHER OVERHEAD OBSTRUCTIONS.
10. THE AREA IN FRONT OF THE SOLID WASTE CONTAINER PAD OR ENCLOSURE SHALL BE MARKED AS A "NO PARKING" ZONE WITH MINIMUM 12" HIGH WHITE STENCILED LETTERING.
11. COMMERCIAL PLAN SUBMITTALS SHALL SHOW THE LOCATION OF ALL PROPOSED WASTE CONTAINER PADS OR ENCLOSURES ON SCALED SITE PLANS. PADS AND ENCLOSURES SHALL BE SHOWN RELATIVE TO ALL OTHER BUILDINGS AND UTILITIES.
12. COMMERCIAL SITE PLAN SUBMITTALS WITH PROPOSED WASTE CONTAINER PADS OR ENCLOSURES SHALL REFERENCE OR SHOW CITY OF RICHLAND STANDARD DETAILS SW1 OR SW2. ANY DEVIATIONS FROM THE CITY STANDARDS AND SPECIFICATIONS SHALL BE NOTED AND DETAILED AND APPROVED BY THE CITY'S PUBLIC WORKS ENGINEERING DEPARTMENT PRIOR TO PERMIT ISSUANCE.

Richland Washington

SOLID WASTE CONTAINER SITE SPECIFICATIONS SHEET 1 OF 2

PUBLIC WORKS ENGINEERING	
APPR. BY: JR	DATE: 09.13
DRAWN BY: JG	DWG: SW3
CAD FILE: 2013_SW3-1_09_2013	

OPTIONAL CONTAINER ENCLOSURE

A. IF A CONTAINER ENCLOSURE IS DESIRED, THE CONCRETE CURB SHALL BE ON THREE SIDES, WITH A TWELVE (12) FOOT CLEAR GATE OPENING, A TWELVE (12) FOOT PAD WIDTH AND A EIGHT (8) FOOT PAD DEPTH. THERE SHALL BE A MINIMUM CLEARANCE OF EIGHT (8) INCHES FROM THE FACE OF THE CURB TO THE INSIDE FACE OF THE FENCE OR WALL OF THE ENCLOSURE. THE FENCE OR WALL SHALL HAVE A MINIMUM HEIGHT OF FOUR (4) FEET, SIX (6) INCHES. (SEE STANDARD DETAIL SW2-A FOR OPTIONAL SOLID WASTE CONTAINER ENCLOSURES)
B. GATED ENCLOSURES SHALL HAVE LATCHES TO HOLD THE GATE IN THE OPEN POSITION. THE GATES SHALL BE DESIGNED TO OPEN AT AN ANGLE WIDE ENOUGH TO ALLOW CLEAR ACCESS INTO THE ENCLOSURE BY THE COLLECTION VEHICLES.
C. FOR ENCLOSURES WHERE MORE THAN ONE CONTAINER WILL BE USED A MINIMUM OF 12-FEET OF CLEAR ACCESS SHALL BE PROVIDED TO EACH DUMPSTER WITHIN THE ENCLOSURE. THE CLEAR ACCESS DISTANCE SHALL EXCLUDE SPACE UTILIZED FOR RECYCLE CONTAINERS AND DIVIDING WALLS OR GATE POSTS.
D. WHERE A CONCRETE BLOCK CONTAINER ENCLOSURE IS INSTALLED, VERTICAL AND HORIZONTAL STEEL REINFORCEMENT SHALL BE REQUIRED IN ACCORDANCE WITH THE CURRENT UNIFORM BUILDING CODE.
E. CONTAINER ENCLOSURES SHALL NOT BE BUILT IN AN EASEMENT OR OVER A UTILITY.

OPTIONAL SOLID WASTE COMPACTORS

A. A CONCRETE PAD LARGE ENOUGH FOR THE ENTIRE UNIT SHALL BE PROVIDED.
B. THE CONCRETE PAD SHALL HAVE A MINIMUM SIX (6) INCH CURB ON THREE SIDES AND SLOPE TO A DRAIN IN THE PAD. THE FOURTH SIDE MUST BE OPEN TO ALLOW STRAIGHT ACCESS FOR COLLECTION VEHICLES.
C. THE CONCRETE PAD DRAIN SHALL BE TRAPPED, FROST PROOF AND HAVE A REMOVABLE "BASKET" STRAINER TO KEEP OUT LARGE SOLIDS.
D. THE DRAIN SHALL BE INSTALLED IN THE AREA OF THE PAD WHERE THE LEAKAGE IS ANTICIPATED AND THE PAD SHALL BE SLOPED TOWARD THE DRAIN.
E. THE DRAIN SHALL BE PLUMBED INTO THE SANITARY SEWAGE DISPOSAL SYSTEM AND SHALL INCLUDE AN OIL/WATER SEPARATOR. IT SHALL NOT BE PLUMBED INTO THE STORM DRAIN SYSTEM.
F. COLD RUNNING WATER SHALL BE PROVIDED AND SHALL HAVE FREEZE-PROOF VALVES. AN INTERIOR FAUCET WITH ATTACHED HOSE MAY BE UTILIZED. ALL SURFACES SHALL BE EASILY CLEANABLE.
G. ODOR NEUTRALIZING EQUIPMENT MAY BE REQUIRED DEPENDING ON COLLECTION FREQUENCY AND SOLID WASTE COMPOSITION. IF SUCH EQUIPMENT IS DEEMED NECESSARY BY THE CITY OF RICHLAND, IT SHALL BE PROVIDED BY THE OWNER.

Richland Washington

SOLID WASTE CONTAINER SITE SPECIFICATIONS SHEET 2 OF 2

PUBLIC WORKS ENGINEERING	
APPR. BY: JR	DATE: 09.13
DRAWN BY: JG	DWG: SW3
CAD FILE: 2013_SW3-2_09_2013	

Standard Details
Irrigation

IRRIGATION DISTRIBUTION NOTES

1. PIPING SHALL BE INSTALLED WITH A MINIMUM OF 30 INCHES OF COVER ABOVE TOP OF PIPE.

2. IRRIGATION PIPE SHALL MEET THE FOLLOWING REQUIREMENTS:

   DISTRIBUTION MAIN AND SERVICES LOCATED IN BACKYARD EASEMENTS: CLASS 200 PVC, SDR 21 OR BETTER. GLUED JOINTS AND FITTINGS ARE ALLOWED ON PIPE SIZES LESS THAN 4 INCH. TWO PART GLUE AND PRIMER REQUIRED. PVC SCH 80 REQUIRED FOR SERVICES.

   DISTRIBUTION MAIN LOCATED IN CITY STREET RIGHT OF WAY: C900 PVC, DR18

   DISTRIBUTION SERVICES LOCATED IN CITY STREET RIGHT OF WAY: 1 1/4" OR 2" PE TUBING, AWWA C901-96 PE 3408 (CTS)DR9

   ALL PIPE SHALL BE PURPLE IN COLOR OR HAVE PURPLE STRIPE.

3. BACKFILL MATERIAL SHALL CONTAIN NO ROCK, ORGANIC MATTER OR MATERIALS LARGER THAN 6 INCHES. PIPE TO BE BEDDED FULL WIDTH OF TRENCH 4 INCHES BELOW BOTTOM OF PIPE AND 6 INCHES ABOVE TOP OF PIPE WITH APPROVED NATIVE OR IMPORTED BEDDING MATERIAL.

4. IDENTIFICATION TAPE SHALL BE INSTALLED 12 INCHES BELOW FINISHED GRADE OVER ALL PIPES LOCATED WITHIN PUBLIC STREET RIGHT-OF-WAY. TAPE SHALL BE 2 INCHES WIDE PLASTIC COATED ALUMINUM AND SHALL BE CLEARLY MARKED "CAUTION IRRIGATION LINE BURIED BELOW," CONTINUOUSLY ALONG THE LENGTH OF THE TAPE WITH MINIMUM 1/2 INCH LETTERS. TAPE SHALL BE PURPLE IN COLOR.

5. TRACER WIRE SHALL BE SECURED TO ALL UNDERGROUND IRRIGATION PIPING WITH DUCT TAPE AT 10 FOOT INTERVALS. WIRE SHALL BE 12 GAUGE PIPELINE TRACER WIRE (TYPE PTW) SINGLE STRAND. 8"-10" TAILS SHALL BE INSTALLED IN EVERY VALVE BOX. SEE DETAIL.

6. GATE VALVES SHALL HAVE A NON-RISING STEM GATE WITH AN "O" RING SEAL AND RESILIENT SEAL. THE OPERATOR SHALL BE A 2 INCH SQUARE NUT. ALL VALVES SHALL HAVE FLANGE OR MECHANICAL JOINT CONNECTIONS MEETING AWWA C-509 STANDARDS.

7. VALVE BOXES SHALL BE INSTALLED ON ALL VALVES. VALVE BOXES SHALL BE CAST IRON, TWO PIECE SLIP TYPE, PER MATERIAL LIST. VALVE BOX COVER SHALL HAVE "IRR" OR "IRRIGATION" STAMPED ON IT. 9" THICK, 24" DIAMETER CONCRETE COLLARS SHALL BE PLACED AROUND ALL VALVE BOXES LOCATED IN UNPAVED AREAS. SEE STANDARD DETAIL U4.

8. THRUST BLOCKS ARE REQUIRED AT ALL FITTINGS, EXCEPT TEES LEADING TO SINGLE SERVICE RISERS.

9. ALL FITTINGS 3 INCHES AND BELOW SHALL BE SOLVENT WELDED. ALL FITTINGS 4 INCHES AND ABOVE SHALL BE CAST IRON MEETING AWWA STANDARDS.

10. IRRIGATION SYSTEM SHALL BE PRESSURE TESTED AT 100 PSI, AND HELD FOR ONE HOUR WITH NO PRESSURE LOSS.

Richland Washington	RESIDENTIAL IRRIGATION DISTRIBUTION NOTES	PUBLIC WORKS ENGINEERING
		APPR. BY: PKR — DATE: 12.2017
		DRAWN BY: LD — DWG: IRR1
		CAD FILE: 2013_IRR1_12_2017

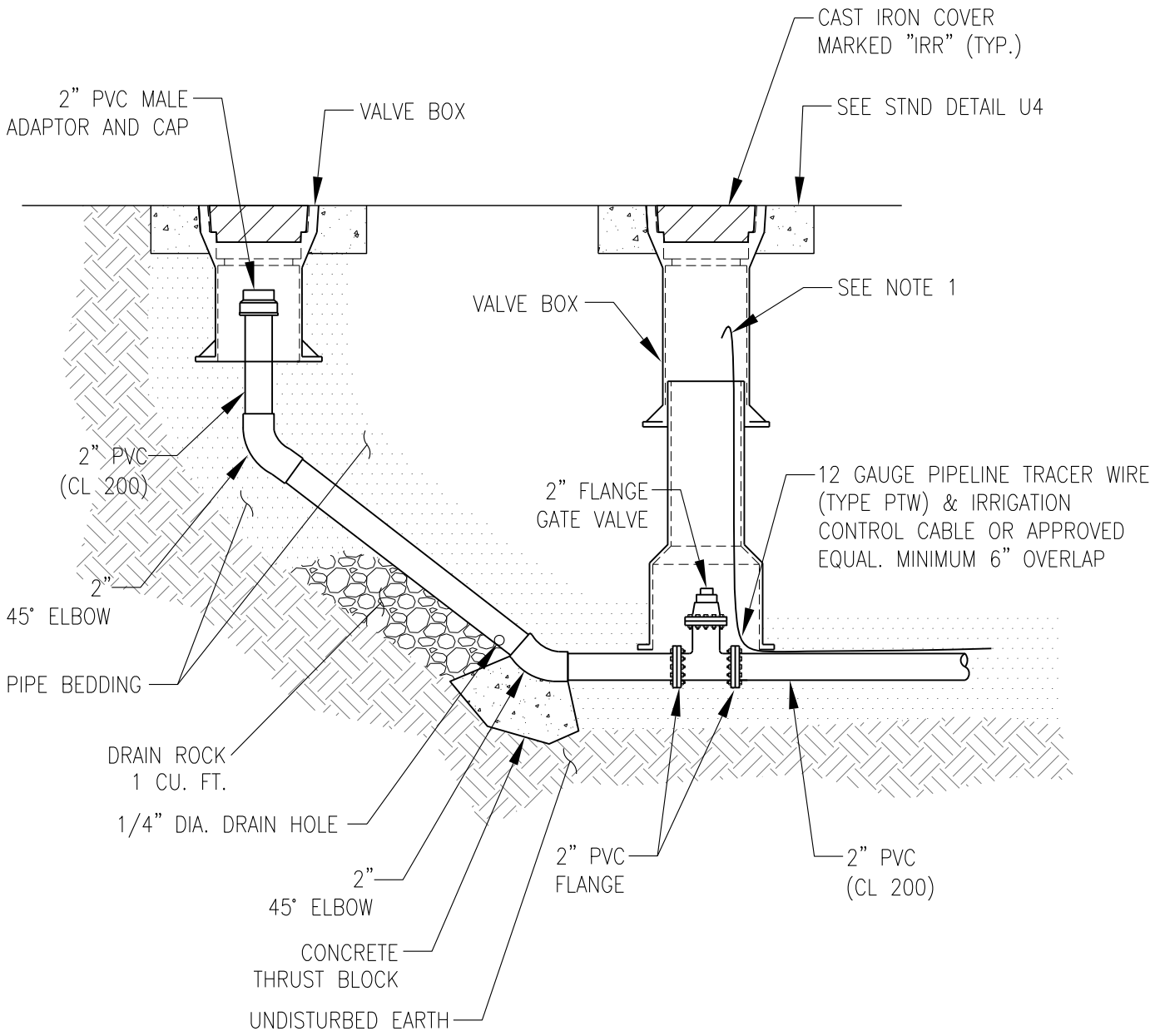

ELEVATION

NOTE:

1. INSTALL 8"–10" TAIL PIECE OF TRACER WIRE INSIDE EVERY VALVE BOX. IF THE DISTANCE BETWEEN VALVE BOXES OR RISERS IS GREATER THAN 300'. INSTALL CARSONITE WATER SERVICE MARKER WITH TRACER WIRE.

Richland Washington	2" IRRIGATION DISTRIBUTION BLOW-OFF	PUBLIC WORKS ENGINEERING
		APPR. BY: PKR — DATE: 12.2010
		DRAWN BY: SC NYBY — DWG: IRR2
		CAD FILE: 2012_IRR2_12_2010

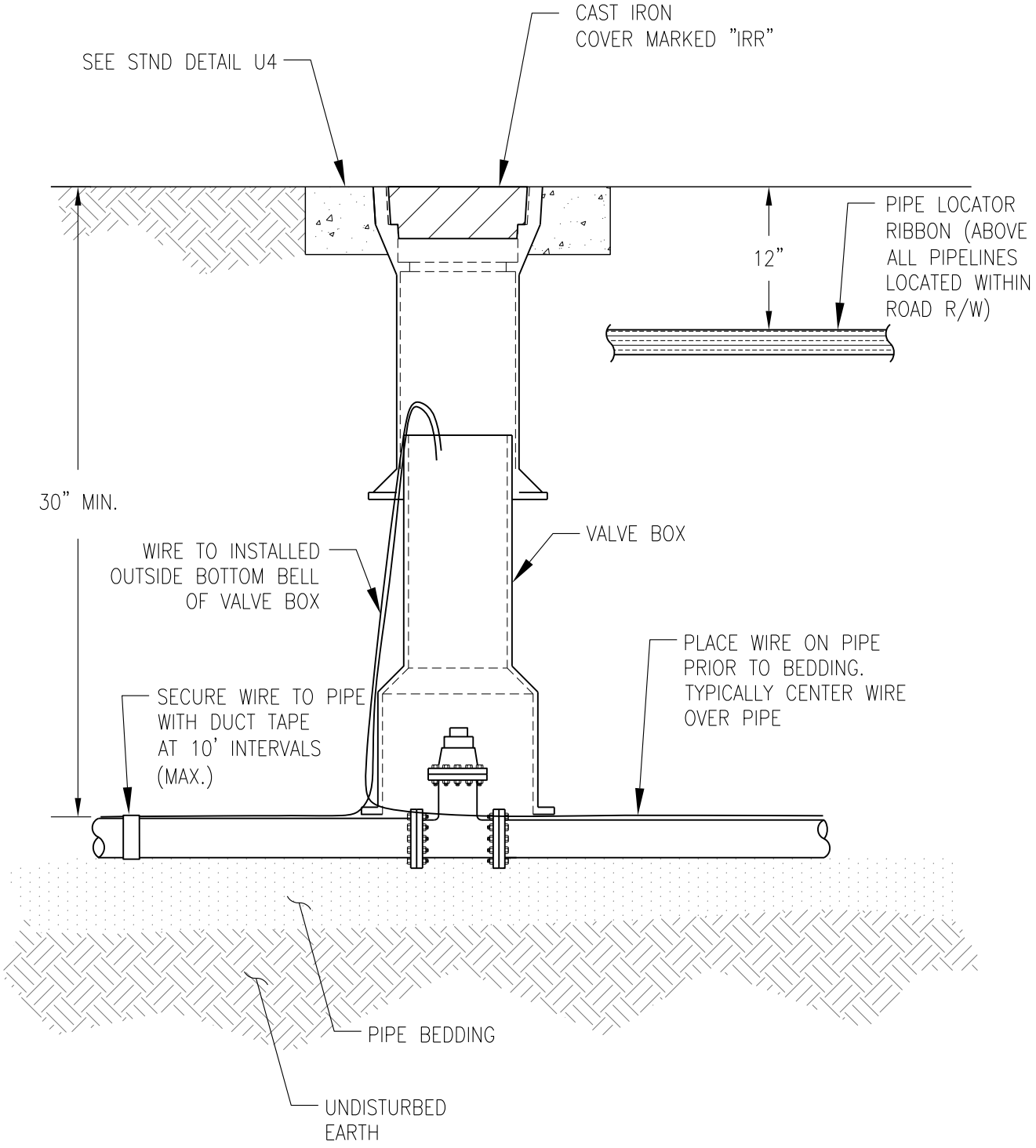

ELEVATION

Richland Washington	IRRIGATION DISTRIBUTION VALVE ASSEMBLY	PUBLIC WORKS ENGINEERING
		APPR. BY: PKR — DATE: 12.2010
		DRAWN BY: SC NYBY — DWG: IRR3
		CAD FILE: 2012_IRR3_12_2010

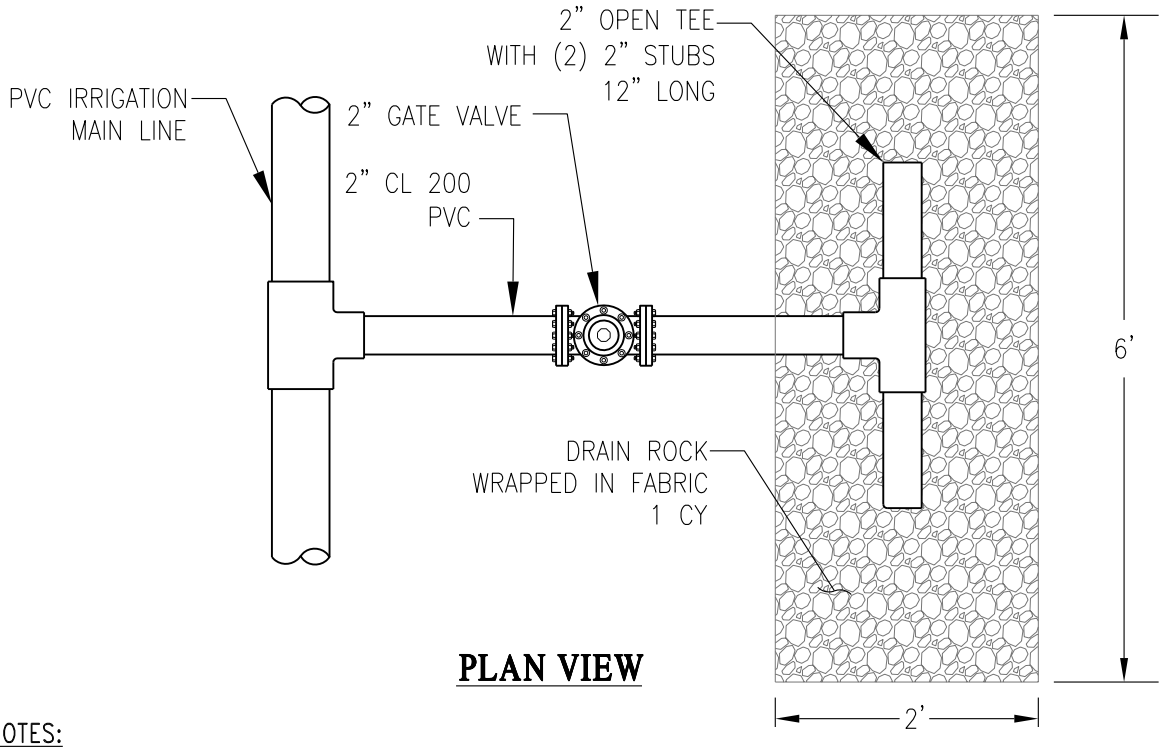

PLAN VIEW

NOTES:

1. USE WHEN NOT DRAINED TO STORM DRAIN SYSTEM.
2. INSTALL DRAIN AT THE LOW POINT OF THE SYSTEM.

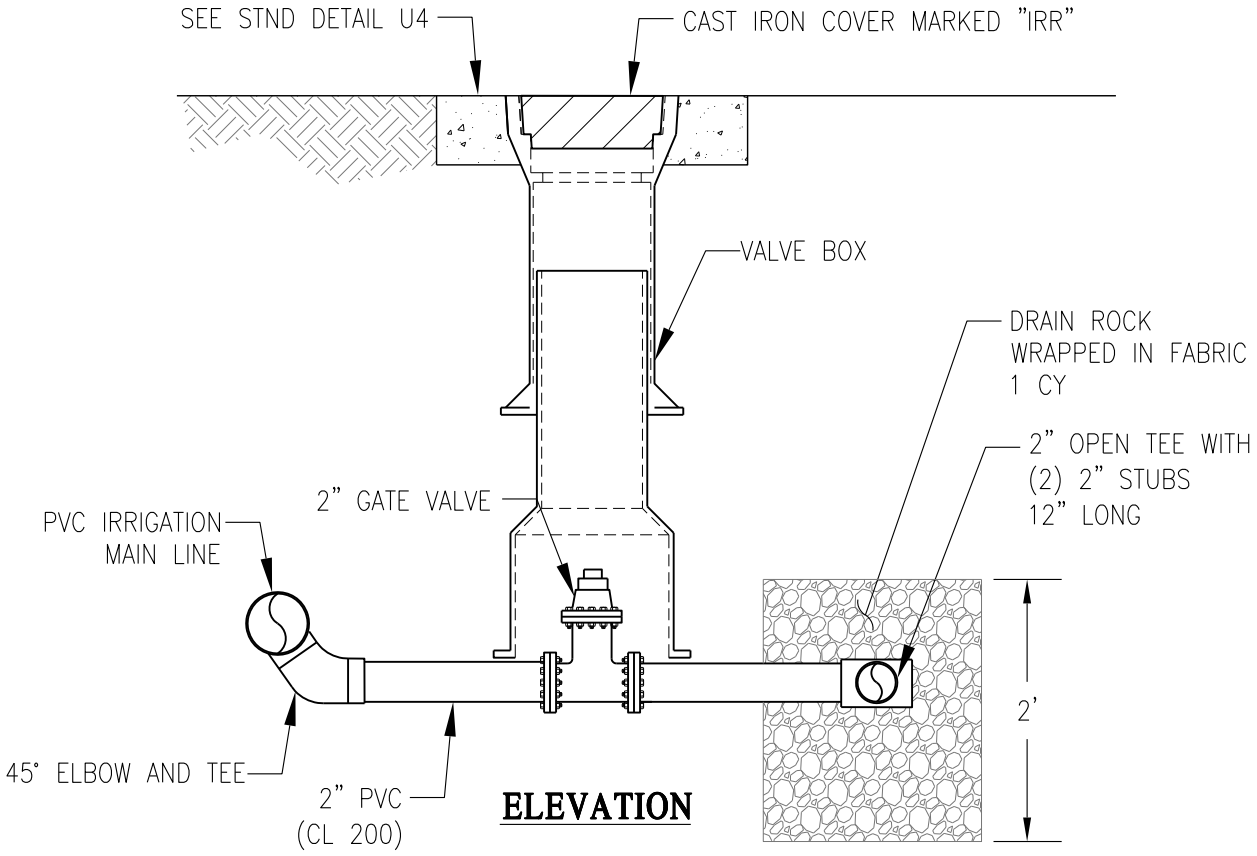

ELEVATION

Richland Washington	2" IRRIGATION DISTRIBUTION DRAIN	PUBLIC WORKS ENGINEERING
		APPR. BY: PKR — DATE: 12.2010
		DRAWN BY: SC NYBY — DWG: IRR4
		CAD FILE: 2012_IRR4_12_2010

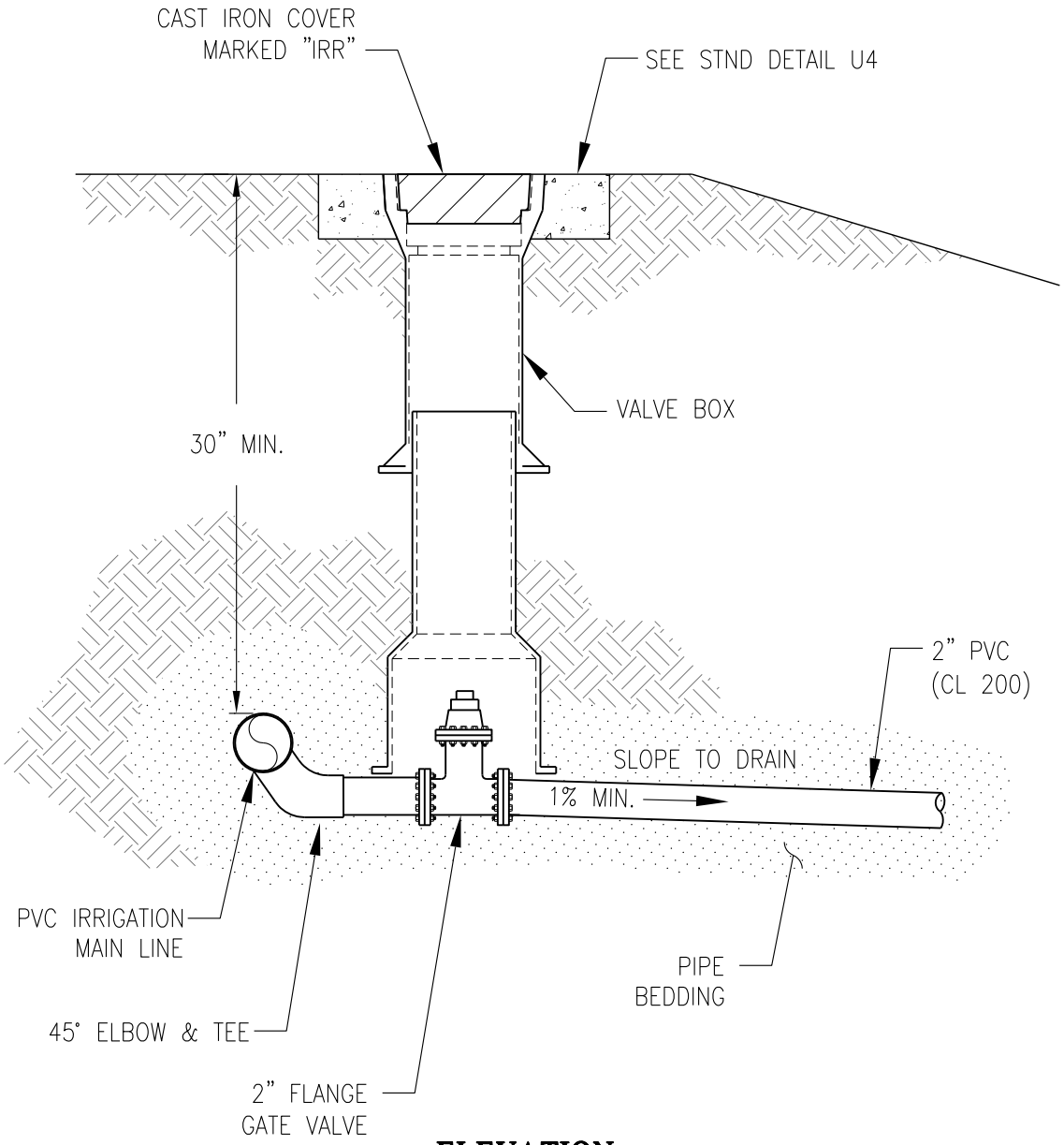

ELEVATION

NOTE:

1. PENETRATION INTO THE STORM DRAIN SYSTEM SHALL BE HIGHER THAN LOWEST INVERT ELEVATION OF THE STRUCTURE. CUT FLUSH INSIDE BARREL AND SAND COLLAR SHALL BE USED. THE ENTRANCE HOLE SHALL BE SAWCUT, AND THE SAND COLLAR SHALL BE GROUTED INSIDE AND OUT.

Richland Washington	2" IRRIGATION DISTRIBUTION DRAIN (TO STORM DRAIN SYSTEM)	PUBLIC WORKS ENGINEERING
		APPR. BY: PKR — DATE: 12.2010
		DRAWN BY: SC NYBY — DWG: IRR5
		CAD FILE: 2012_IRR5_12_2010

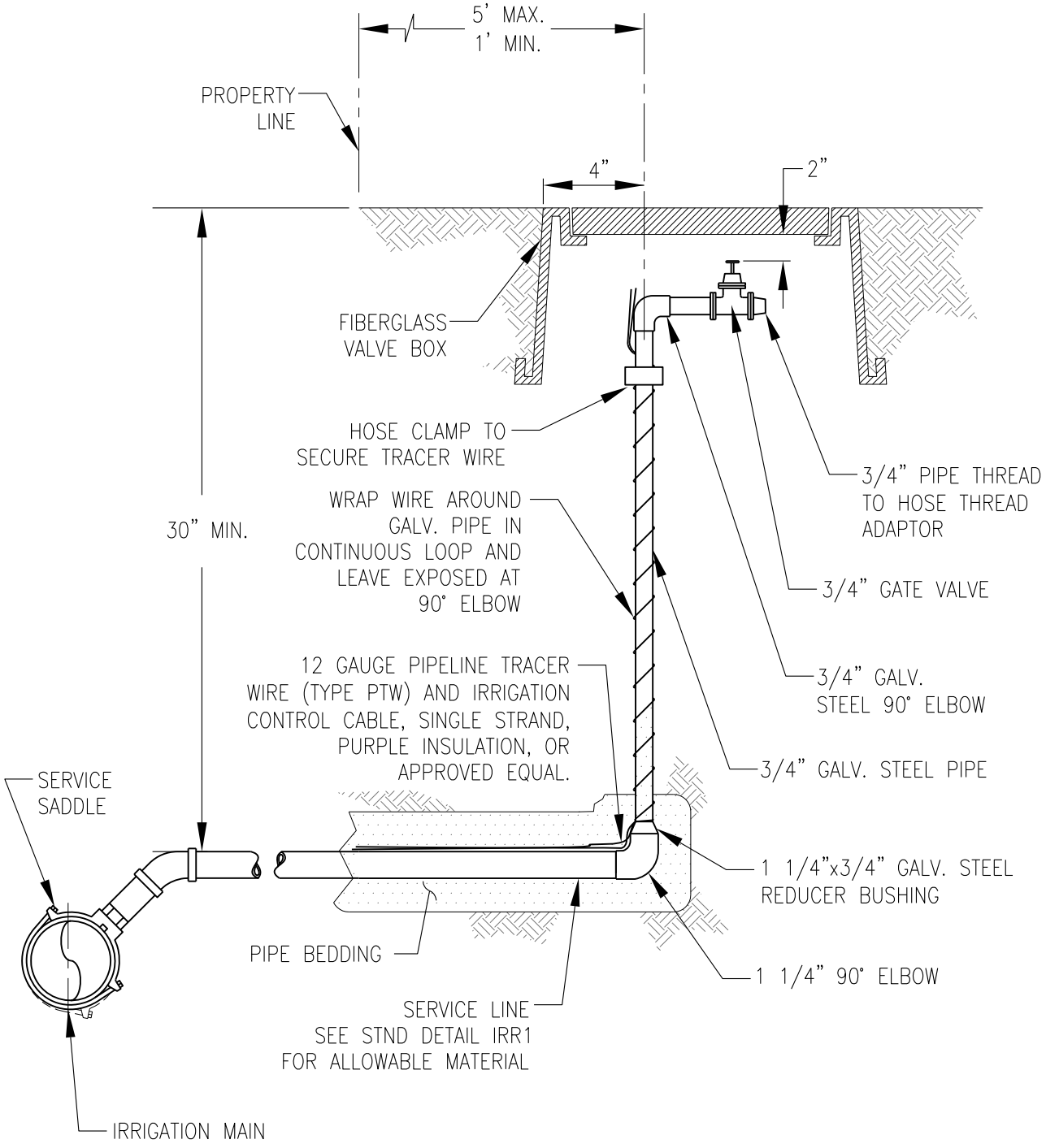

IRRIGATION DISTRIBUTION SERVICE RISER

PUBLIC WORKS ENGINEERING	
APPR. BY: PKR	DATE: 11.15
DRAWN BY: LD	DWG: IRR6
CAD FILE: 2013_IRR6_11_2015	

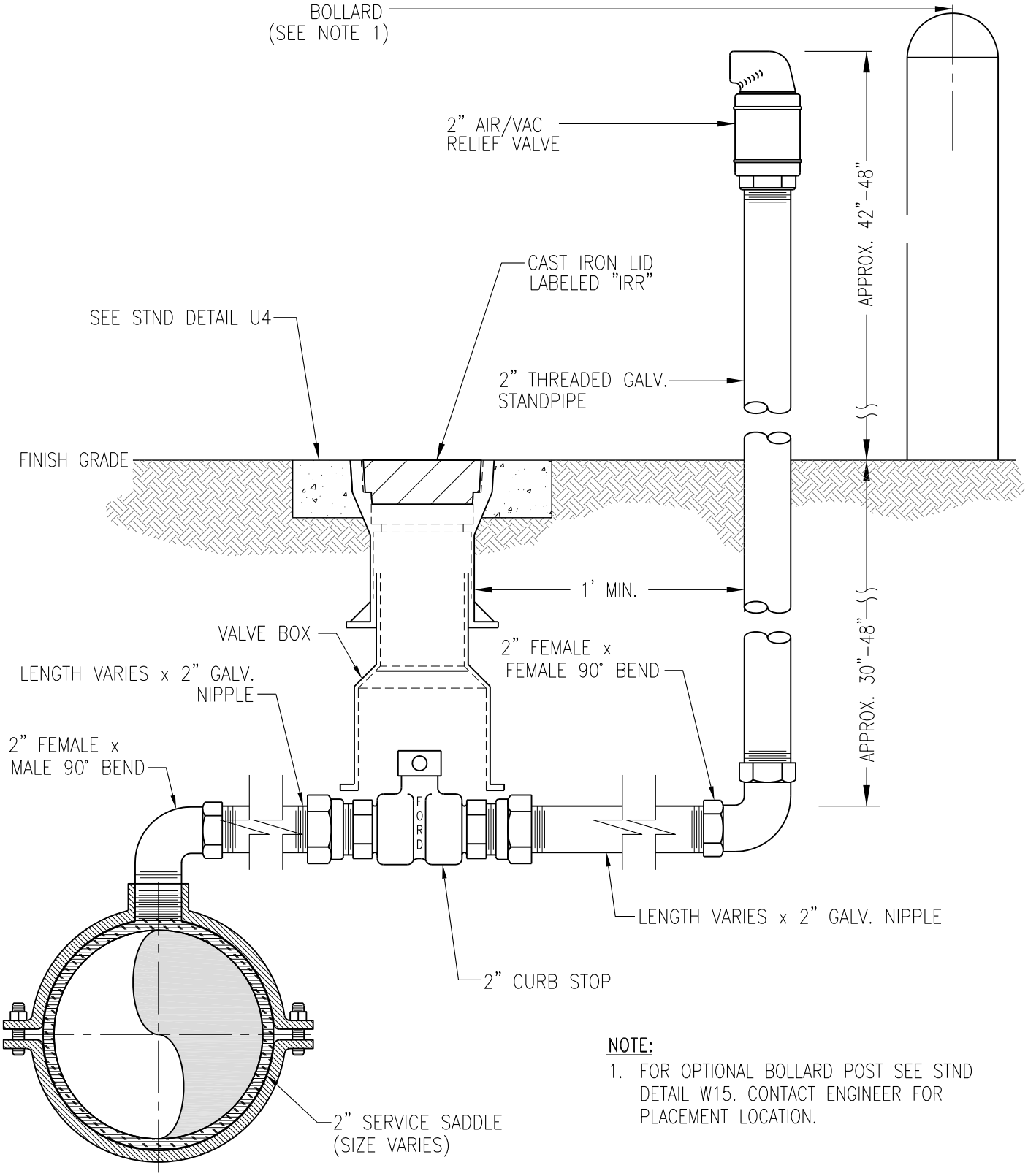

NOTE:

1. FOR OPTIONAL BOLLARD POST SEE STND DETAIL W15. CONTACT ENGINEER FOR PLACEMENT LOCATION.

IRRIGATION DISTRIBUTION AIR/VAC CONNECTION

PUBLIC WORKS ENGINEERING	
APPR. BY: PKR	DATE: 11.15
DRAWN BY: LD	DWG: IRR7
CAD FILE: 2012_IRR7_11_2015	