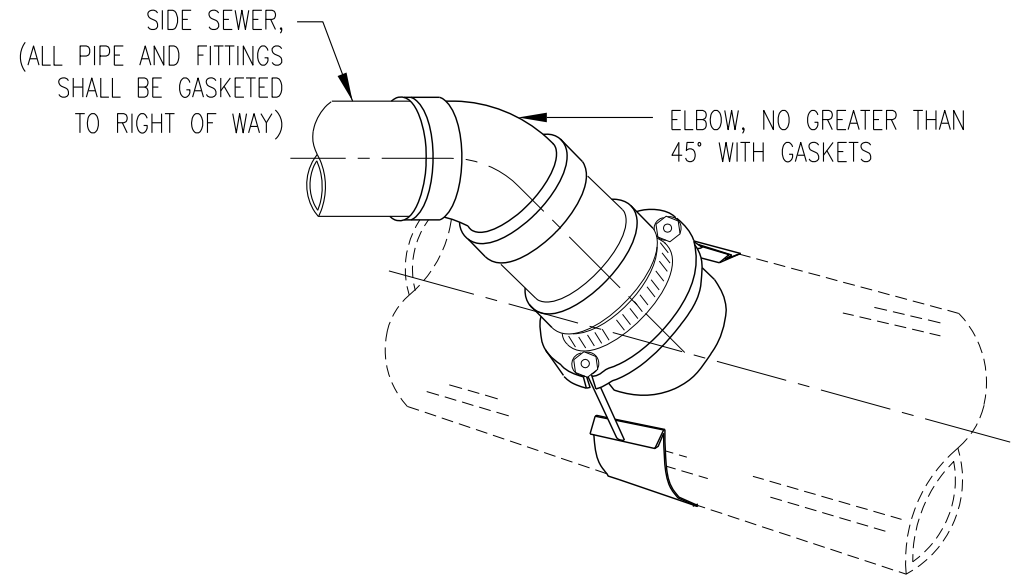

ISOMETRIC

NOTE:

1. HOLE IN MAIN SHALL BE CORE DRILLED AND MATCH THE INSIDE DIAMETER OF SADDLE WHERE IT ATTACHES TO MAIN.

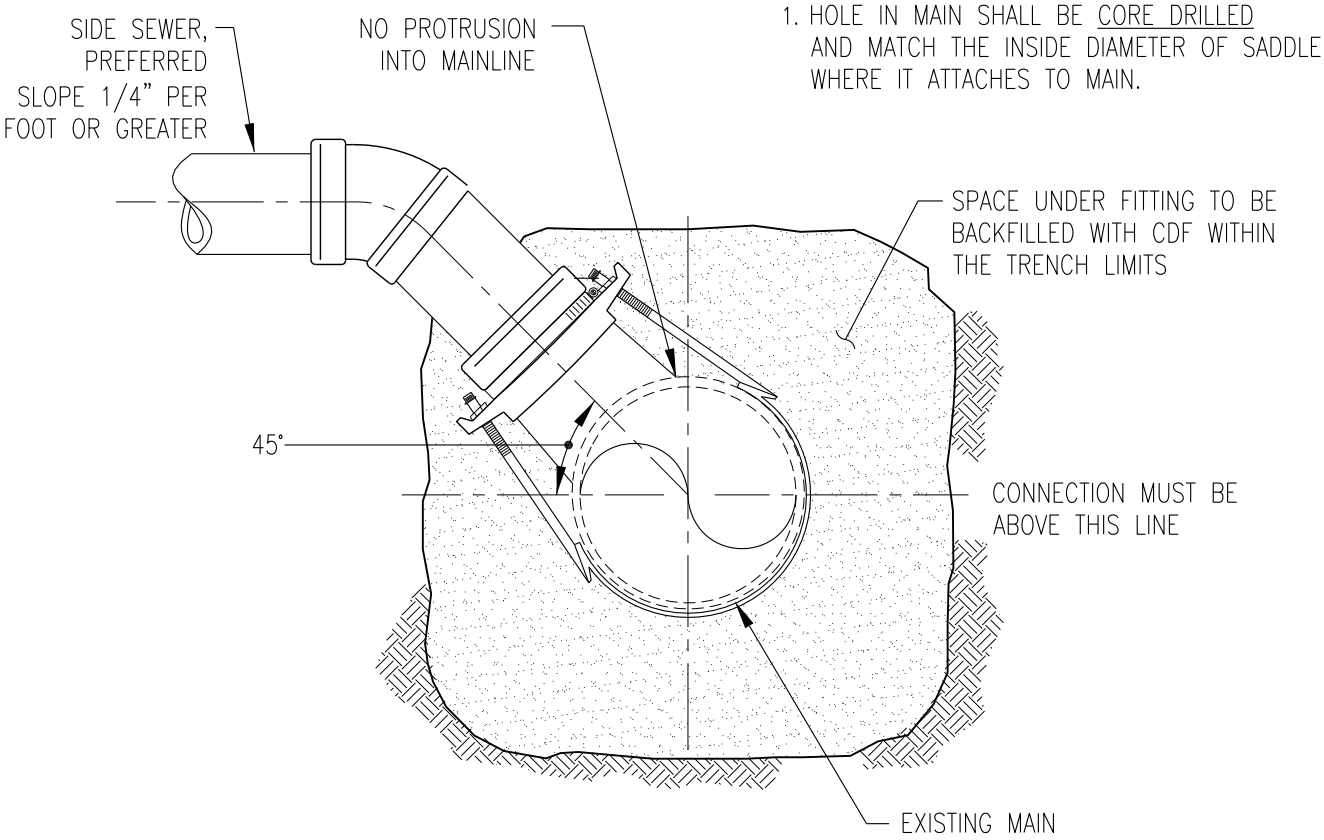

SECTION

Richland Washington	SEWER SERVICE SADDLE CONNECTION TO EXISTING MAIN	PUBLIC WORKS ENGINEERING
		APPR. BY: PKR — DATE: 02.2012
		DRAWN BY: JKS — DWG: S1
		CAD FILE: 2012_S1_02_2012

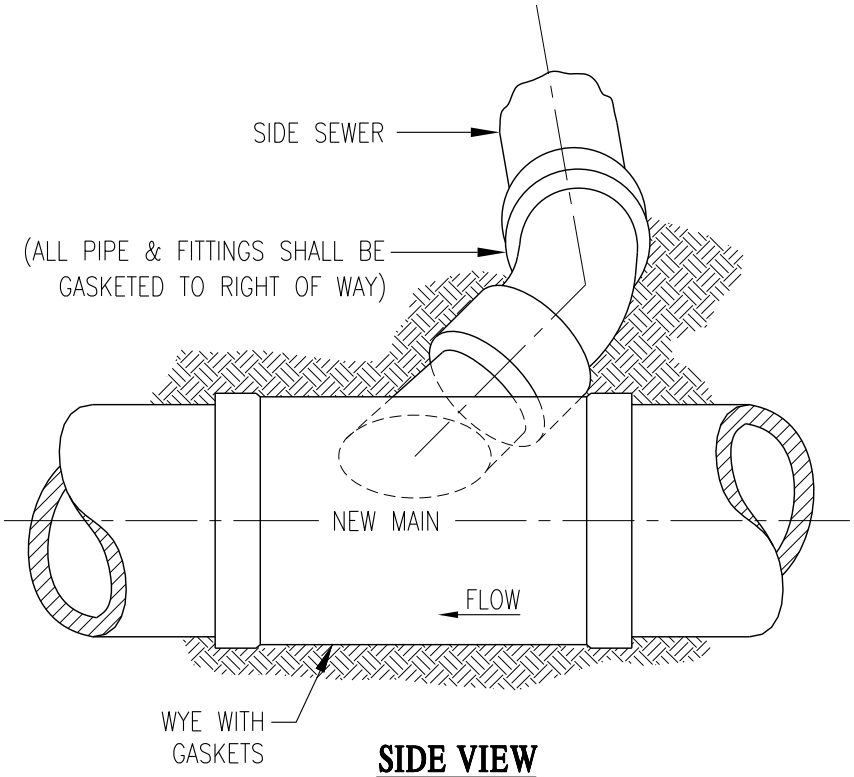

SIDE VIEW

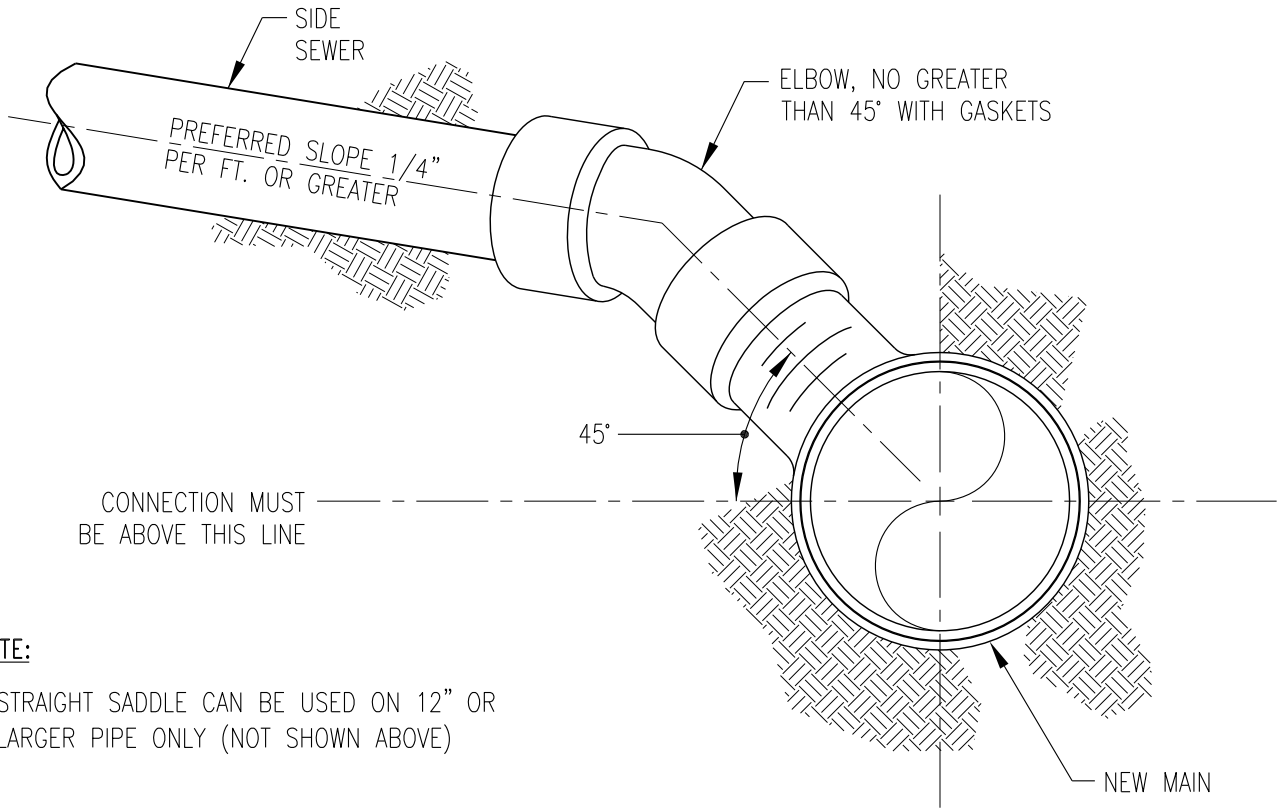

SECTION

NOTE:

1. STRAIGHT SADDLE CAN BE USED ON 12" OR LARGER PIPE ONLY (NOT SHOWN ABOVE)

Richland Washington

SEWER WYE CONNECTION TO NEW MAIN

PUBLIC WORKS ENGINEERING	
APPR. BY: PKR	DATE: 02.2012
DRAWN BY: JKS	DWG: S2
CAD FILE: 2012_S2_02_2012	

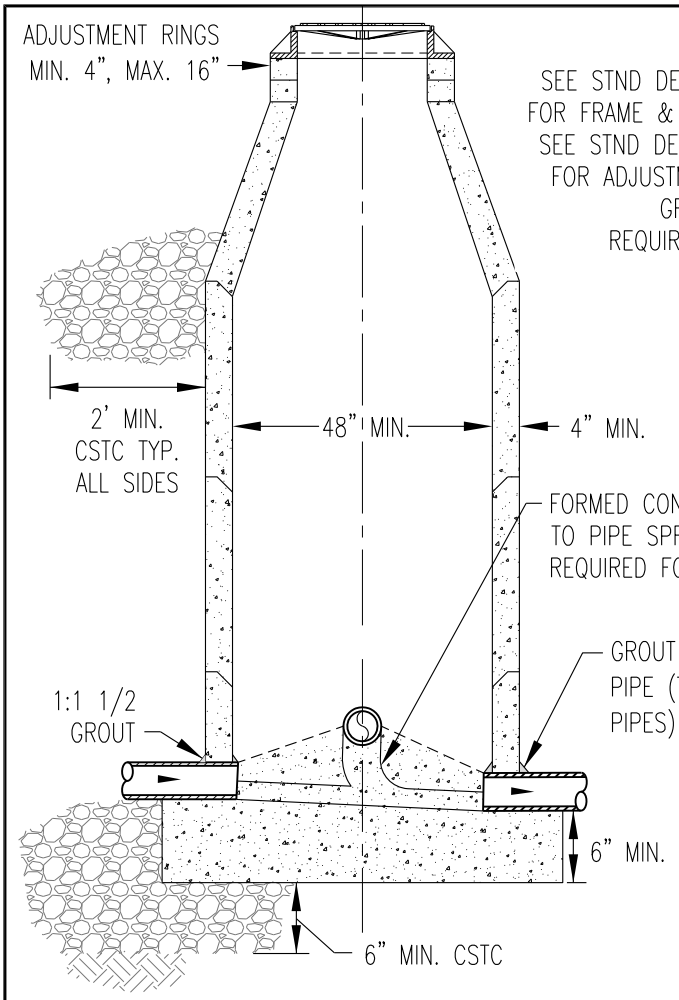

SECTION A-A

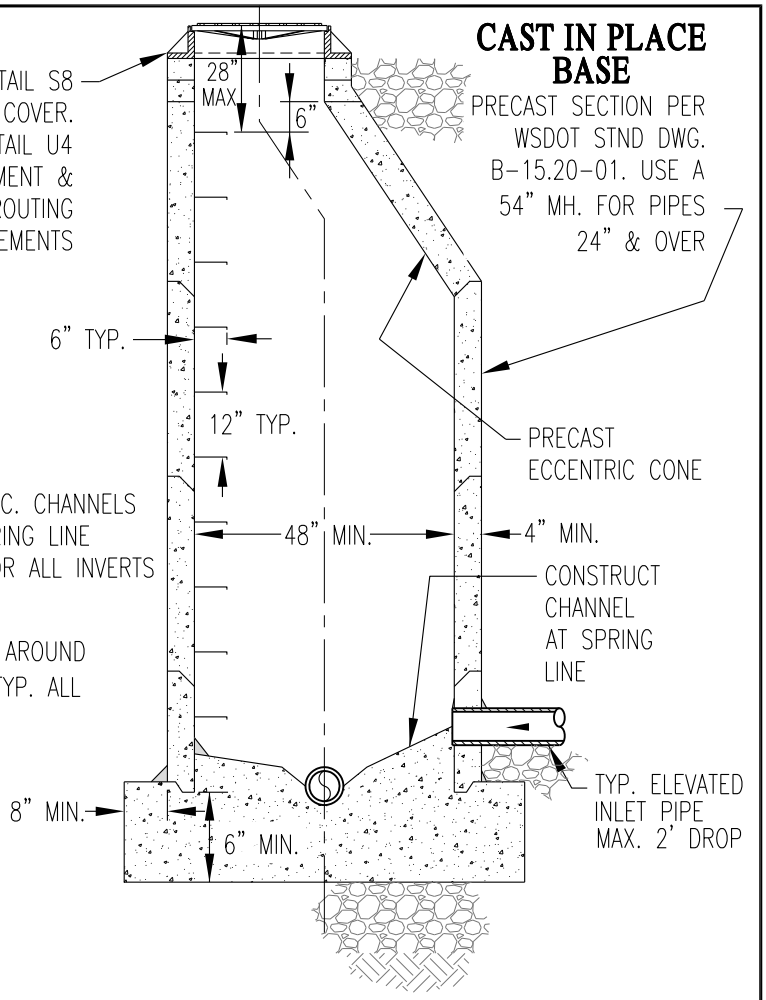

SECTION B-B

NOTES:

1. FOR NEW MAINLINE PIPES: PROVIDE A MINIMUM 0.10 FOOT IN-OUT DROP FOR STRAIGHT RUN AND 0.20 FOOT IN-OUT DROP FOR ANGLE RUNS. PIPES OF DIFFERENT SIZES SHALL ALIGN CROWN TO CROWN.
2. IN GROUNDWATER INSTALLATIONS: ALL MANHOLE JOINTS SHALL BE MADE USING A CONTINUOUS FLEXIBLE RUBBER MANHOLE GASKET JOINT. ALL HOLES JOINTS CONNECTIONS SHALL BE SEALED WITH GROUT ON THE OUTSIDE.
3. A SHALLOW MANHOLE SHALL BE USED WHEN IT'S DEPTH IS 5.5' OR LESS FROM INVERT TO TOP OF RIM.
4. STEPS SHALL BE PLACED OVER BENCH, NOT OBSTRUCTING ANY CHANNEL. MANHOLE STEPS SHALL CONFORM TO AASHTO M199 AND MEET ALL WISHA REQUIREMENTS. STEPS REQUIRED ON SANITARY SEWER ONLY. IF BENCH LESS THAN 1' IN WIDTH, PLACE LADDER OVER DOWNSTREAM PIPE.
5. CHANNEL INTERSECTIONS SHALL BE SMOOTH AND DIRECTED DOWNSTREAM.

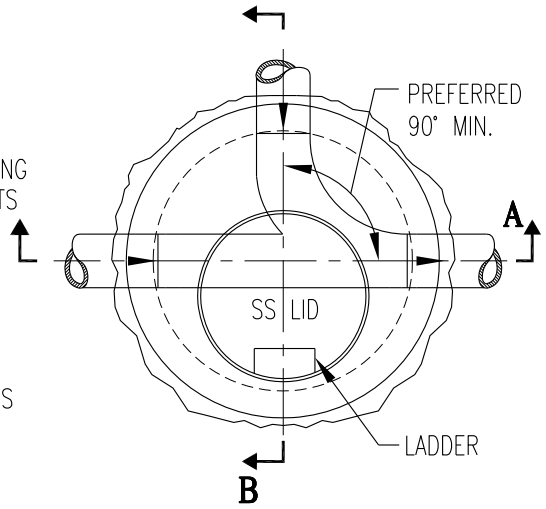

PLAN

Richland Washington

STANDARD MANHOLE (W/CAST IN PLACE BASE)

PUBLIC WORKS ENGINEERING	
APPR. BY: PKR	DATE: 04.16
DRAWN BY: LD	DWG: S3
CAD FILE: 2013_S3_04_2016	

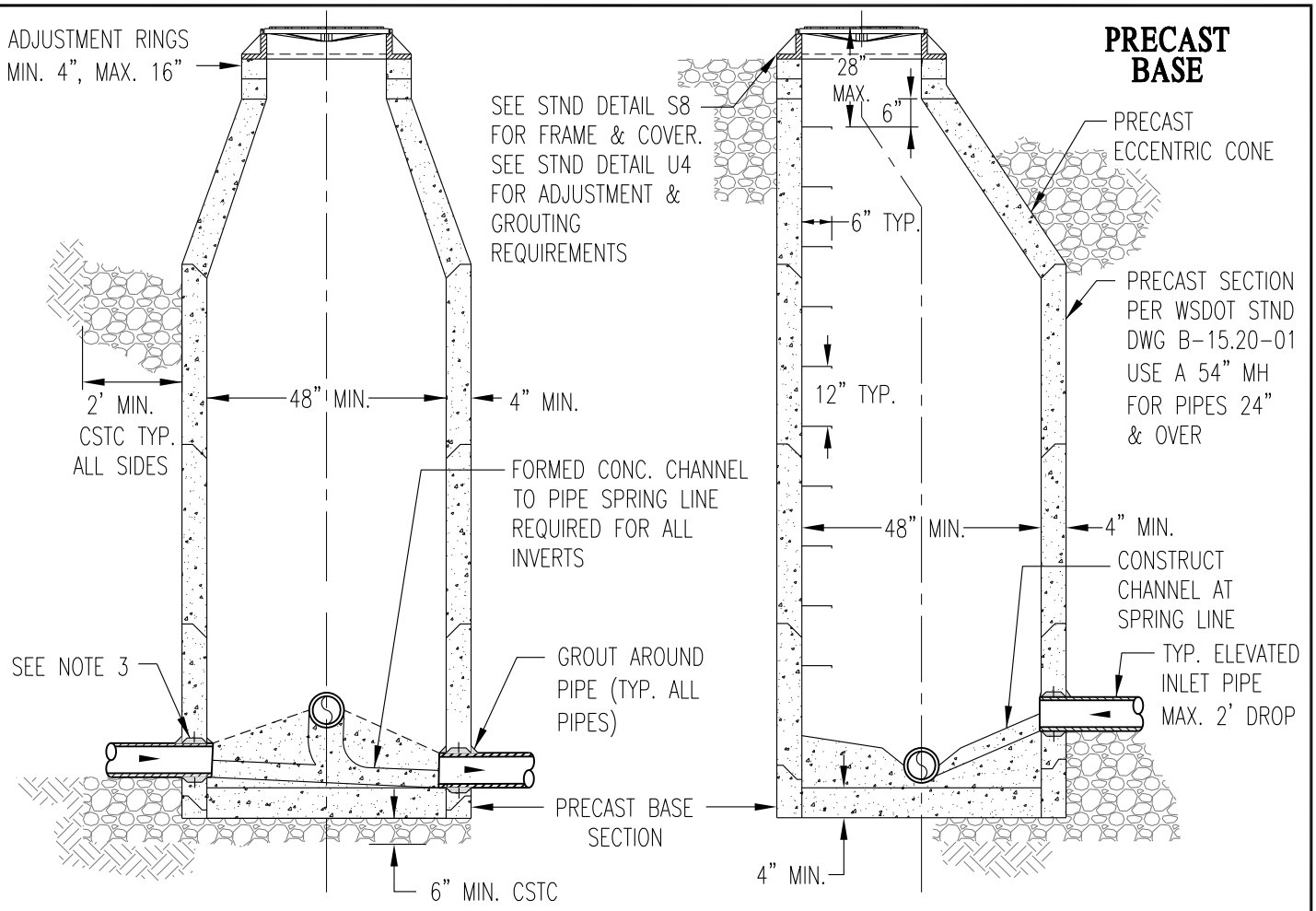

SECTION A-A **SECTION B-B**

NOTES:

1. PROVIDE A MINIMUM 0.10 FOOT IN-OUT DROP FOR STRAIGHT RUN AND 0.20 FOOT IN-OUT DROP FOR ANGLE RUNS. PIPES OF DIFFERENT SIZES SHALL ALIGN CROWN TO CROWN.
2. IN GROUNDWATER INSTALLATIONS: ALL MANHOLE JOINTS SHALL BE MADE USING A CONTINUOUS FLEXIBLE RUBBER MANHOLE GASKET JOINT. ALL HOLES, JOINTS, CONNECTIONS SHALL BE SEALED WITH GROUT ON THE OUTSIDE.
3. ALL NEW PRECAST MANHOLE SECTIONS SHALL BE PROVIDED WITH CAST-IN FLEXIBLE PIPE CONNECTORS.
   NO PIPE PENETRATIONS ALLOWED INTO PRECAST CONE SECTIONS.
4. A SHALLOW MANHOLE SHALL BE USED WHEN IT'S DEPTH IS 5.5' OR LESS FROM INVERT TO TOP OF RIM.
5. STEPS SHALL BE PLACED OVER BENCH, NOT OBSTRUCTING ANY CHANNEL. MANHOLE STEPS SHALL CONFORM TO AASHTO M199 AND MEET ALL WISHA REQUIREMENTS. STEPS REQUIRED ON SANITARY SEWER ONLY. IF BENCH LESS THAN 1' IN WIDTH, PLACE LADDER OVER DOWNSTREAM PIPE.
6. CHANNEL INTERSECTIONS SHALL BE SMOOTH AND DIRECTED DOWNSTREAM.

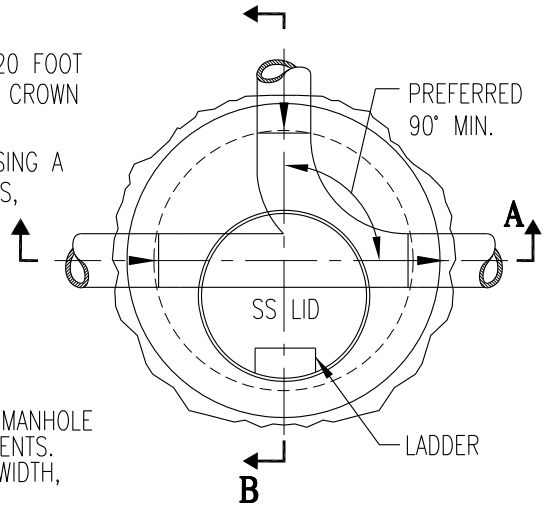

PLAN

Richland Washington

STANDARD MANHOLE (W/PRECAST BASE)

PUBLIC WORKS ENGINEERING	
APPR. BY: PKR	DATE: 07.17
DRAWN BY: LD	DWG: S4
CAD FILE: 2014_S4_07_2017	

CAST IN PLACE BASE

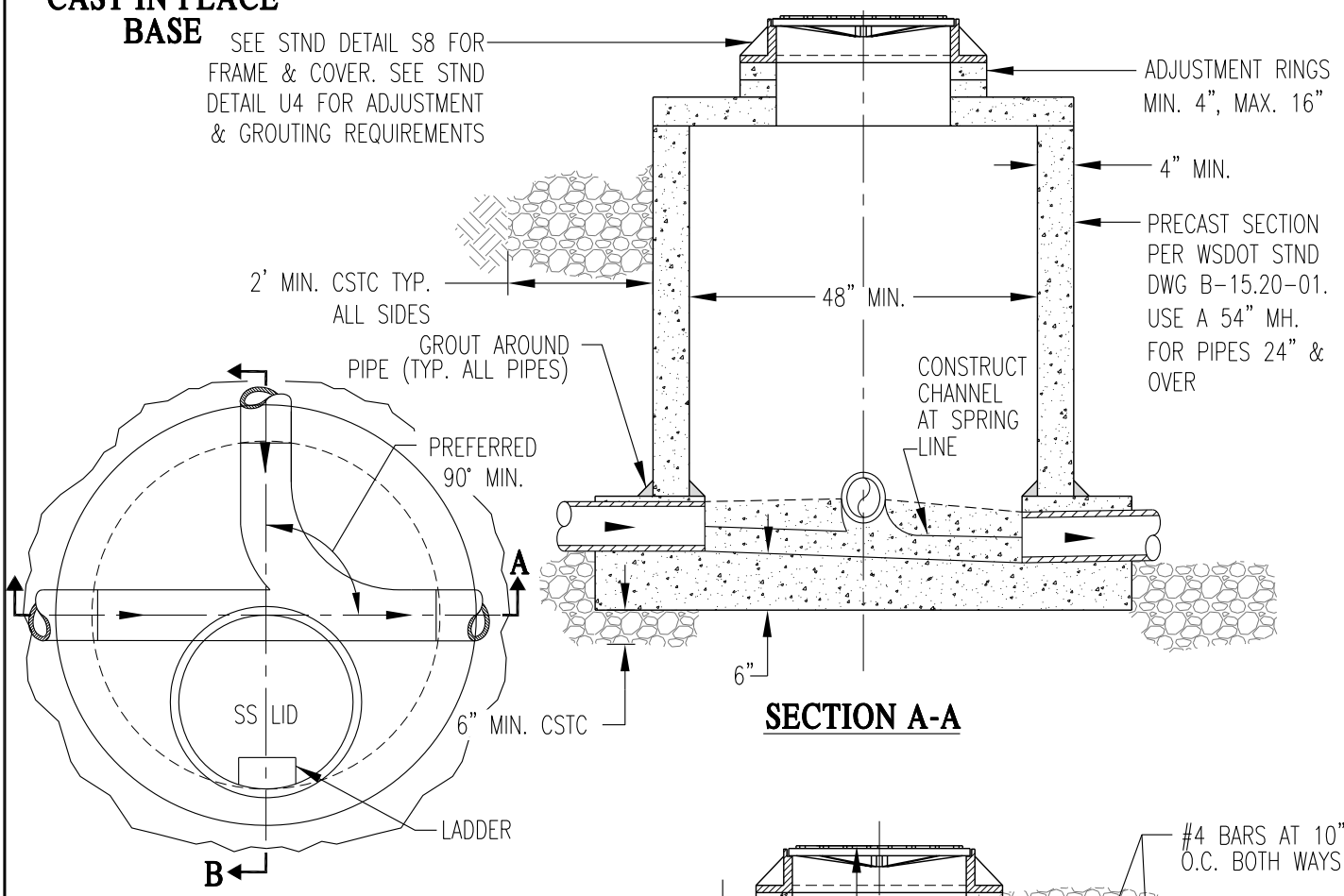

SECTION A-A

PLAN

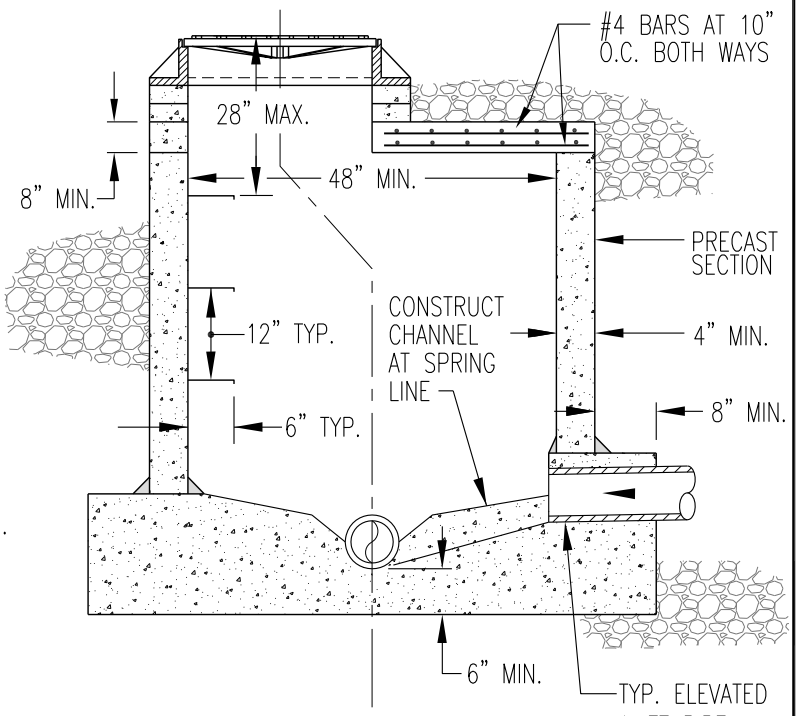

SECTION B-B

NOTES:

1. FOR NEW MAINLINE PIPES: PROVIDE A MINIMUM 0.10 FOOT IN-OUT DROP FOR STRAIGHT RUNS AND 0.20 FOOT IN-OUT DROP FOR ANGLE RUNS. PIPES OF DIFFERENT SIZES SHALL ALIGN CROWN TO CROWN.
2. IN GROUNDWATER INSTALLATIONS: ALL MANHOLE JOINTS SHALL BE MADE USING A CONTINUOUS FLEXIBLE RUBBER MANHOLE GASKET JOINT. ALL HOLES, JOINTS, CONNECTIONS SHALL BE SEALED WITH GROUT ON THE OUTSIDE.
3. A STANDARD MANHOLE SHALL BE USED WHEN IT'S DEPTH IS 5.5' OR MORE FROM INVERT TO TOP OF RIM.
4. STEPS SHALL BE PLACED OVER BENCH, NOT OBSTRUCTING ANY CHANNEL. MANHOLE STEPS SHALL CONFORM TO AASHTO M199 AND MEET ALL WISHA REQUIREMENTS. STEPS REQUIRED ON SANITARY SEWER ONLY. IF BENCH LESS THAN 1' IN WIDTH, PLACE LADDER OVER DOWNSTREAM PIPE.
5. CHANNEL INTERSECTIONS SHALL BE SMOOTH AND DIRECTED DOWNSTREAM.

Richland Washington

SHALLOW MANHOLE (W/CAST IN PLACE BASE)

PUBLIC WORKS ENGINEERING	
APPR. BY: PKR	DATE: 04.16
DRAWN BY: LD	DWG: S5
CAD FILE: 2013_S5_04_2016	

PRECAST BASE

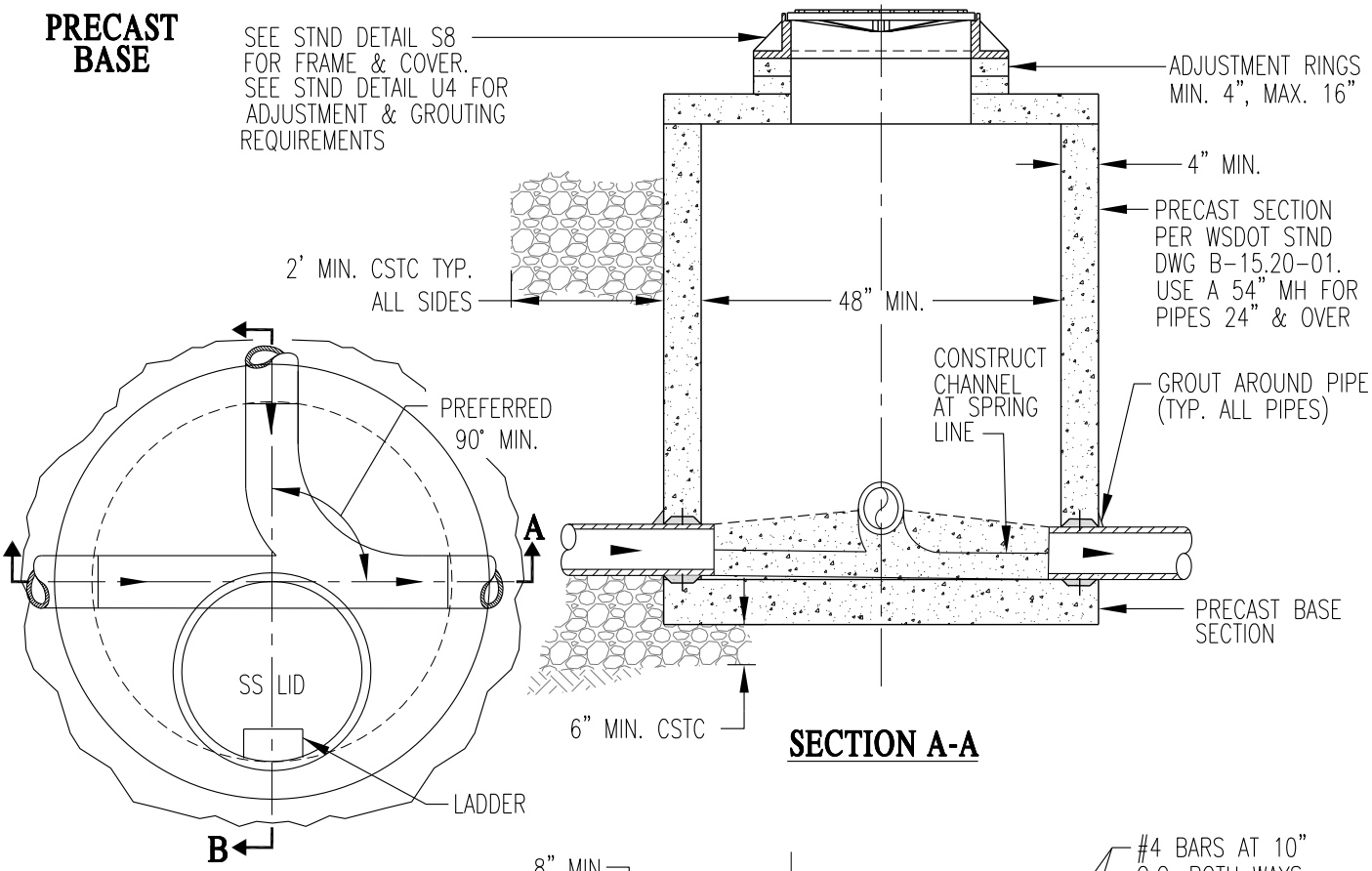

SECTION A-A

PLAN

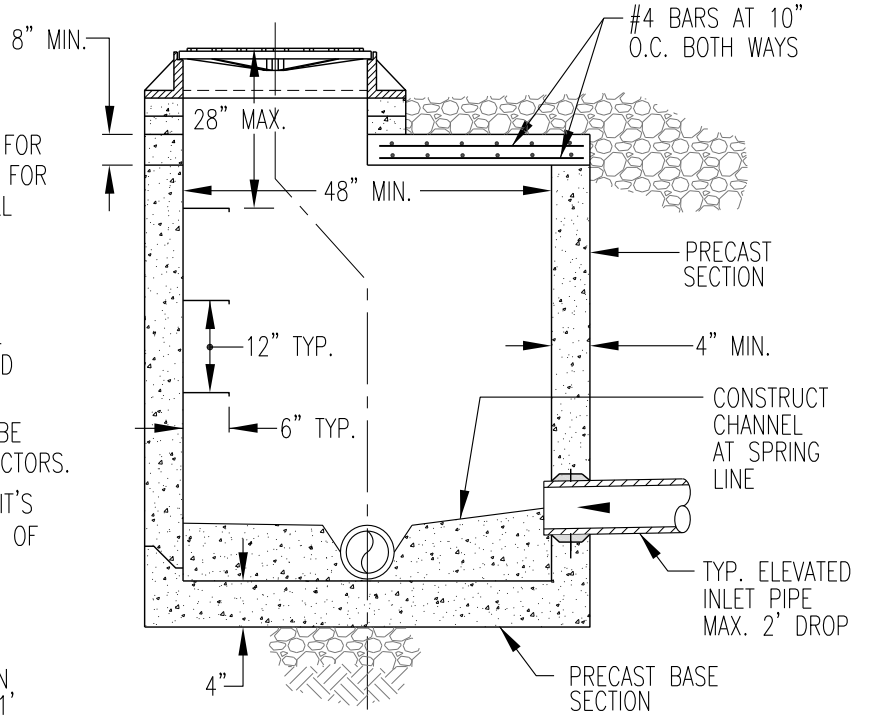

SECTION B-B

NOTES:

1. PROVIDE A MINIMUM 0.10 FOOT IN-OUT DROP FOR STRAIGHT RUNS AND 0.20 FOOT IN-OUT DROP FOR ANGLE RUNS. PIPES OF DIFFERENT SIZES SHALL ALIGN CROWN TO CROWN.
2. IN GROUNDWATER INSTALLATIONS: ALL MANHOLE JOINTS SHALL BE MADE USING A CONTINUOUS FLEXIBLE RUBBER MANHOLE GASKET JOINT. ALL HOLES, JOINTS, CONNECTIONS SHALL BE SEALED WITH GROUT ON THE OUTSIDE.
3. ALL NEW PRECAST MANHOLE SECTIONS SHALL BE PROVIDED WITH CAST-IN FLEXIBLE PIPE CONNECTORS.
4. A STANDARD MANHOLE SHALL BE USED WHEN IT'S DEPTH IS 5.5' OR MORE FROM INVERT TO TOP OF RIM.
5. STEPS SHALL BE PLACED OVER BENCH, NOT OBSTRUCTING ANY CHANNEL. MANHOLE STEPS SHALL CONFORM TO AASHTO M199 AND MEET ALL WISHA REQUIREMENTS. STEPS REQUIRED ON SANITARY SEWER ONLY. IF BENCH LESS THAN 1' IN WIDTH, PLACE LADDER OVER DOWNSTREAM PIPE.
6. CHANNEL INTERSECTIONS SHALL BE SMOOTH AND DIRECTED DOWNSTREAM.

Richland Washington

SHALLOW MANHOLE (W/PRECAST BASE)

PUBLIC WORKS ENGINEERING	
APPR. BY: PKR	DATE: 07.17
DRAWN BY: LD	DWG: S6
CAD FILE: 2013_S6_07_2017	

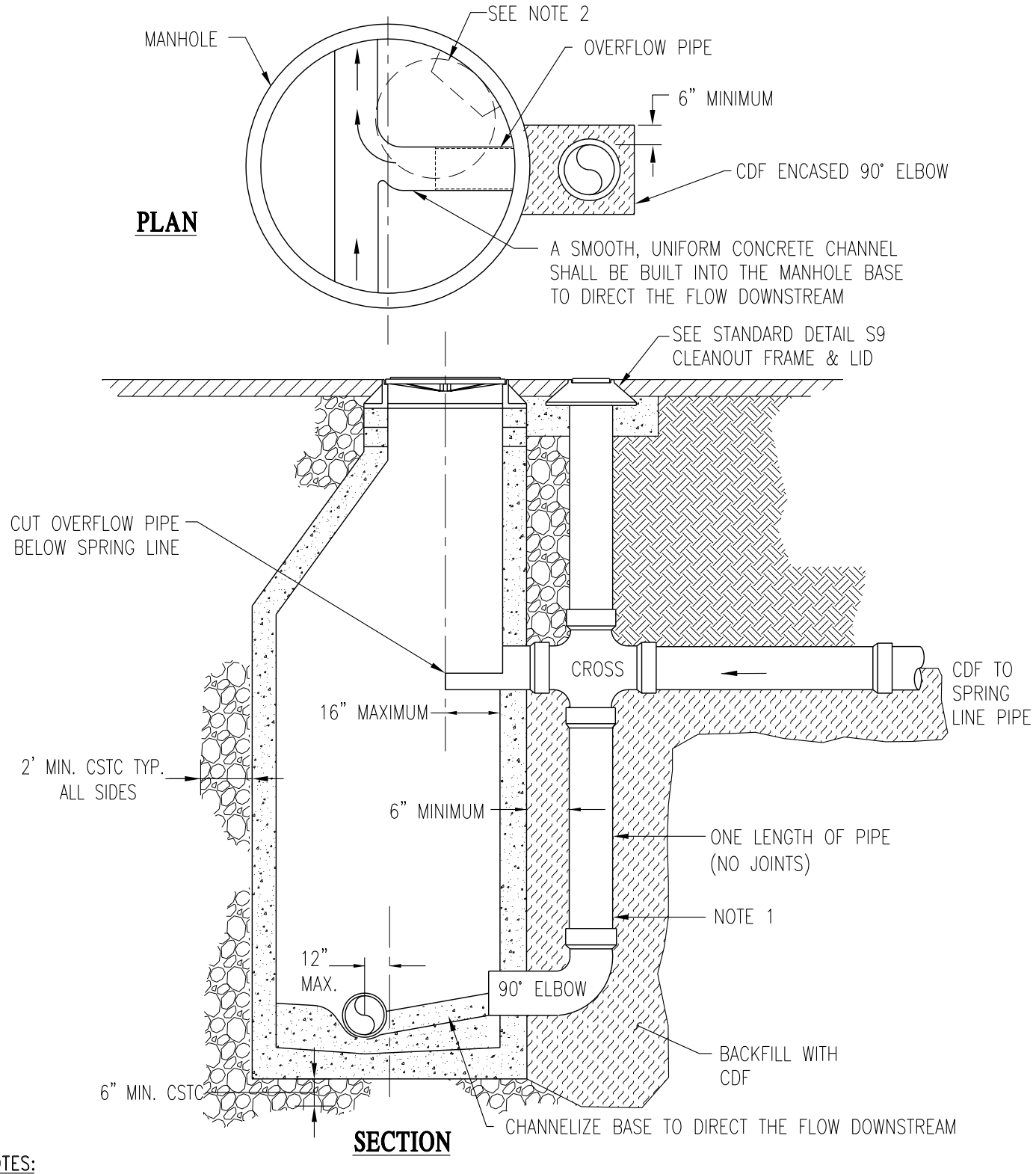

NOTES:

1. DROP CONNECTION PIPE DIAMETER AND FITTINGS SHALL BE EQUAL TO OR GREATER THAN THE DIAMETER OF THE SEWER. DROP CONNECTION PIPE SHALL BE ASTM F679-SDR26(PS115).
2. ROTATE FRAME, COVER, CONE AND LADDER SO THAT IS LOCATED 45° DOWNSTREAM FROM THE DROP CONNECTION.
3. OFFSET MAINLINE (NON-DROP CONNECTION) PIPE IN MANHOLE BY UP TO 12" FROM CENTER LINE.

Richland Washington

SEWER OUTSIDE DROP CONNECTION IN NEW MANHOLES

PUBLIC WORKS ENGINEERING	
APPR. BY: PKR	DATE: 05.14
DRAWN BY: LD	DWG: S6A
CAD FILE: 2014_S6A_05_2014	

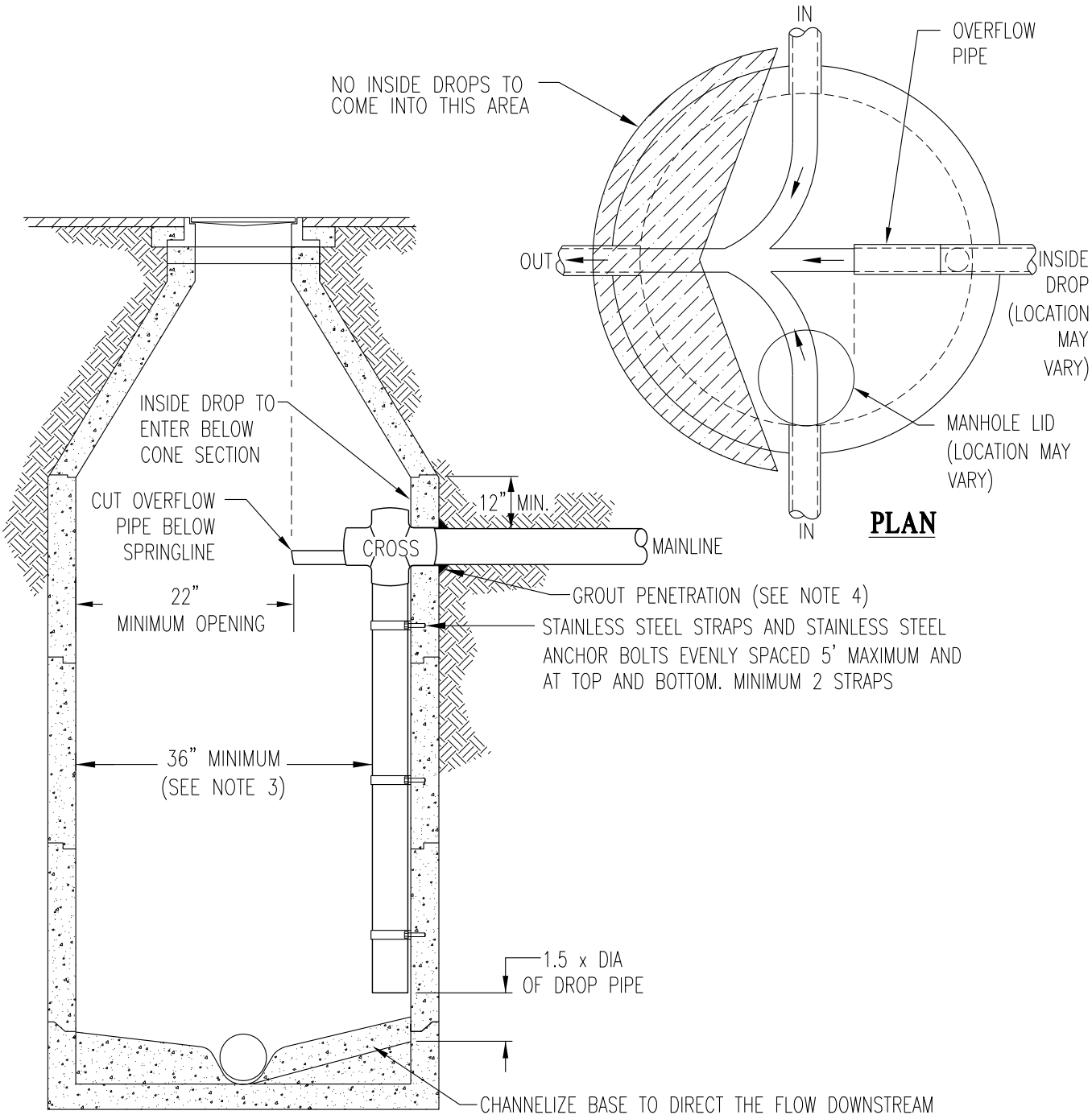

NOTES:

1. DROP CONNECTION PIPE DIAMETER AND FITTINGS SHALL BE EQUAL TO OR GREATER THAN THE DIAMETER OF THE SEWER SERVICE.
2. THE LENGTH OF THE OVERFLOW PIPE VARIES (DEPENDING ON THE MANHOLE LID LOCATION) TO ALLOW ACCESS FROM THE MANHOLE LID.
3. SPECIAL PERMISSION FROM CITY ENGINEER FOR INSTALLATIONS RESULTING IN LESS THAN 36" CLEARANCE.
4. THE ENTRANCE HOLE SHALL BE CORE DRILLED TO A DIAMETER LARGE ENOUGH THAT THE LEG OF THE CROSS WILL FIT THROUGH THE MANHOLE WALL AND SHALL BE GROUTED INSIDE AND OUT.
5. CHANNELIZE BASE TO DIRECT THE FLOW DOWNSTREAM FROM THE DROP PIPE TO THE EXISTING CHANNEL.

Richland Washington

DROP CONNECTION INSIDE SEWER ON EXISTING MANHOLES

PUBLIC WORKS ENGINEERING	
APPR. BY: PKR	DATE: 01.15
DRAWN BY: LD	DWG: S7
CAD FILE: 2013_S7_01_2015	

FRAME
NOT TO SCALE

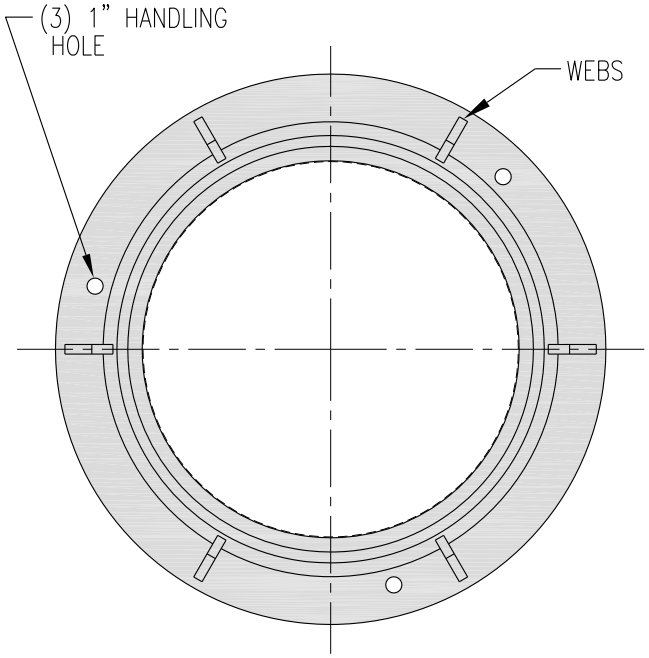

PLAN VIEW

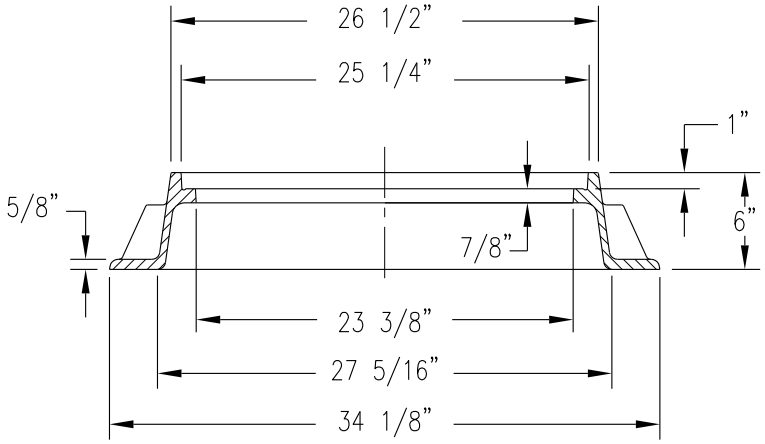

SECTION VIEW

COVER
NOT TO SCALE

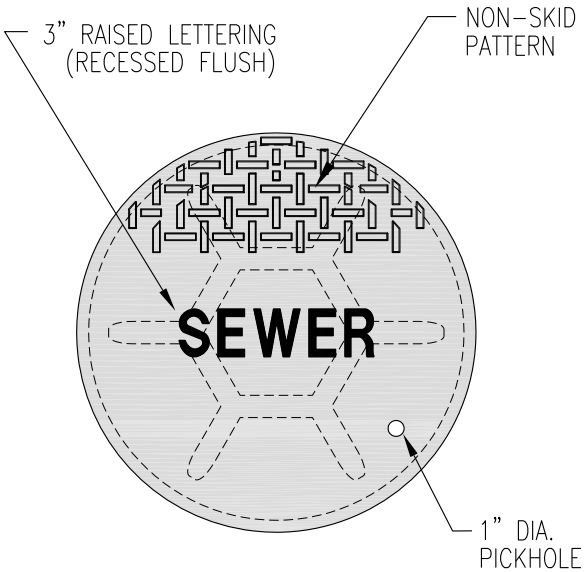

PLAN VIEW

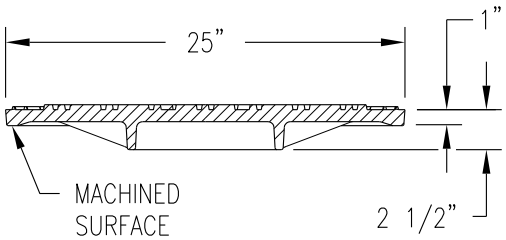

SECTION VIEW

NOTES:

1. COVER – PER MATERIAL LIST
   FRAME – PER MATERIAL LIST
2. MACHINE COVER SEAT & COVER FACE.
3. LOADING – MINIMUM AASHTO H20
4. MANHOLE COVERS TO BE LETTERED AS "WATER," "SEWER," OR "DRAIN" AS REQUIRED BY TYPE OF APPLICATION.

Richland Washington

MANHOLE FRAME AND COVER

PUBLIC WORKS ENGINEERING	
APPR. BY: PKR	DATE: 03.2018
DRAWN BY: EY	DWG: S8
CAD FILE: 2012_S8_03_2018	

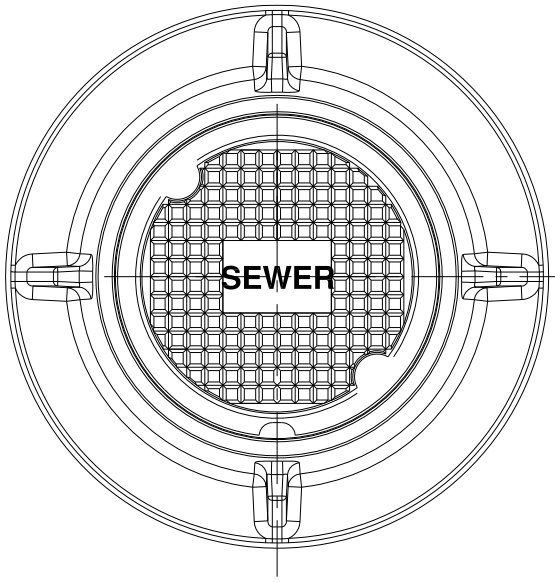

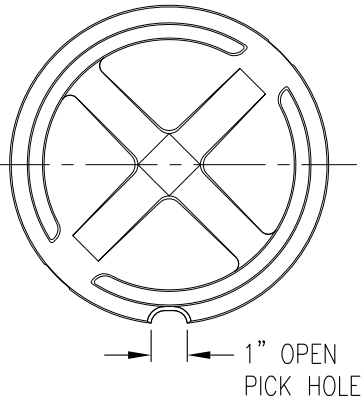

COVER -BOTTOM

COVER - SECTION

DETAIL - SECTION (8")

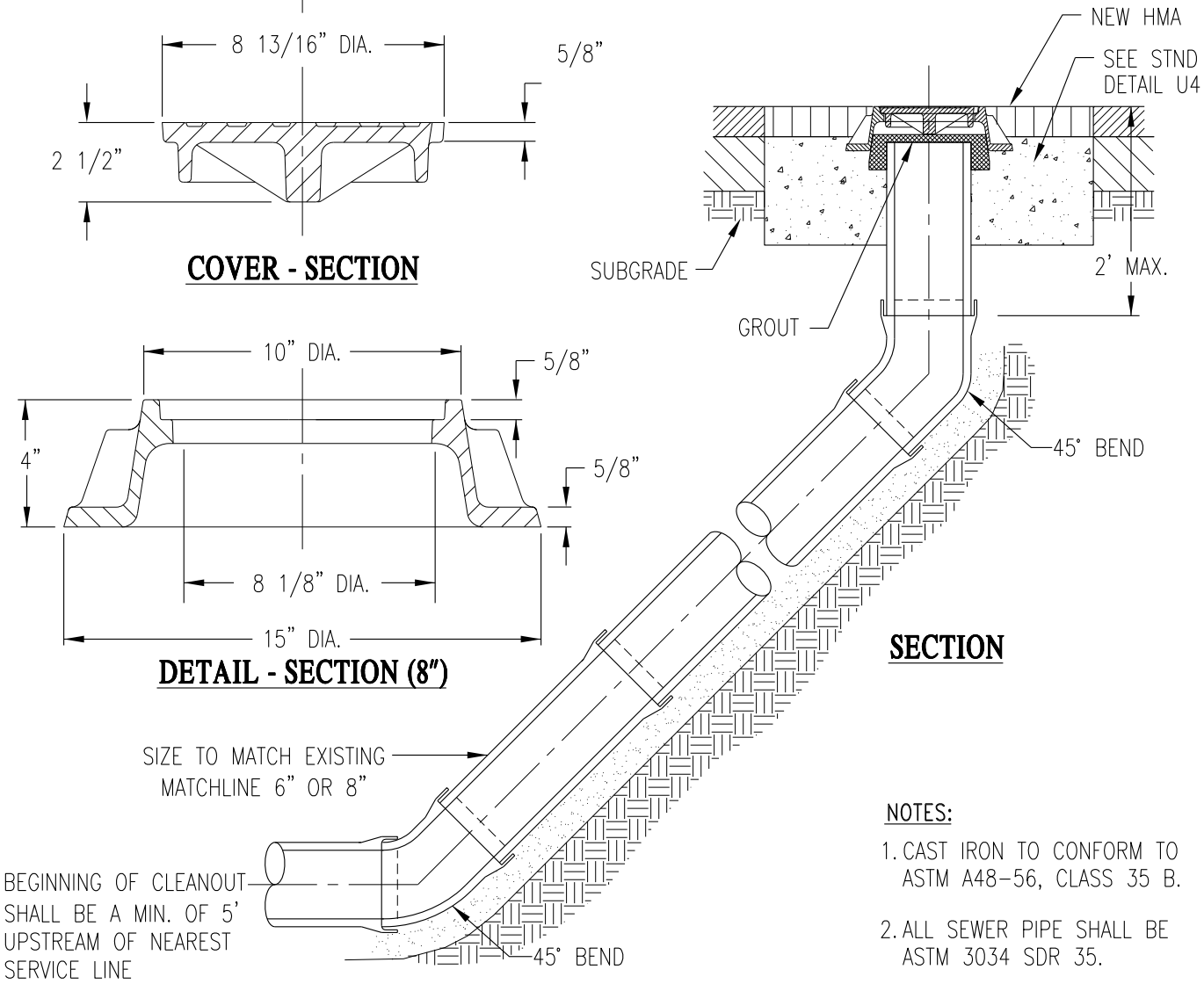

SECTION

NOTES:

1. CAST IRON TO CONFORM TO ASTM A48-56, CLASS 35 B.
2. ALL SEWER PIPE SHALL BE ASTM 3034 SDR 35.

Richland Washington

6" & 8" CLEANOUT ASSEMBLY

PUBLIC WORKS ENGINEERING	
APPR. BY: PKR	DATE: 02.2012
DRAWN BY: JKS	DWG: S9
CAD FILE: 2012_S9_02_2012	

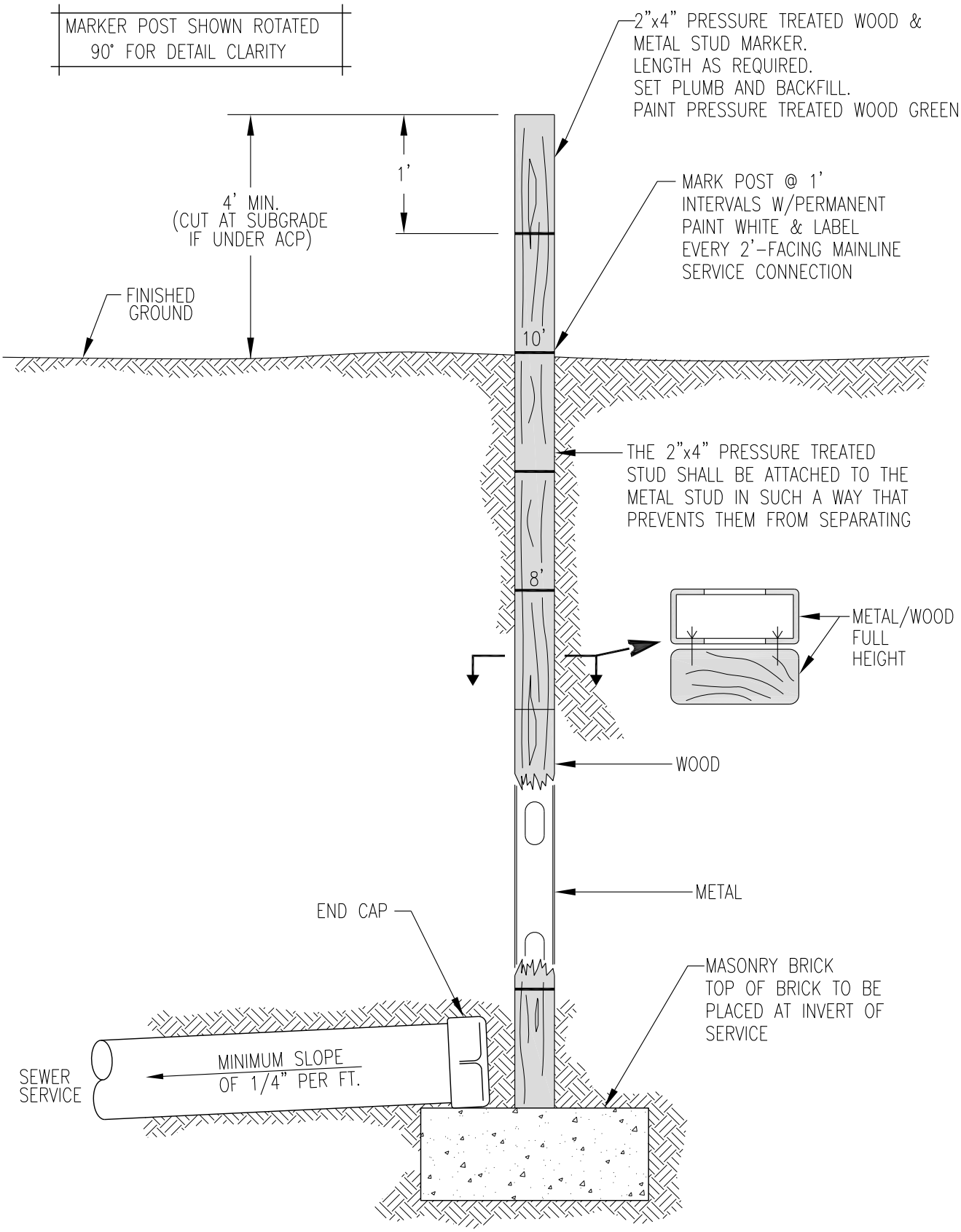

Richland Washington

SEWER MARKER POST

PUBLIC WORKS ENGINEERING	
APPR. BY: PKR	DATE: 02.2012
DRAWN BY: JKS	DWG: S10
CAD FILE: 2012_S10_02_2012	

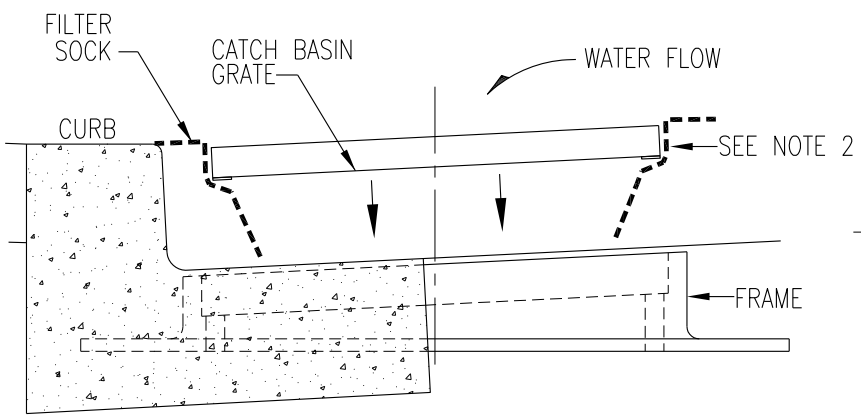

FILTER SOCK DETAIL

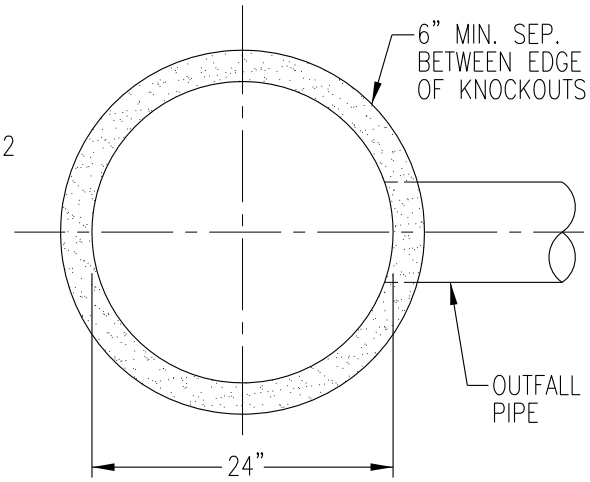

SECTION A-A

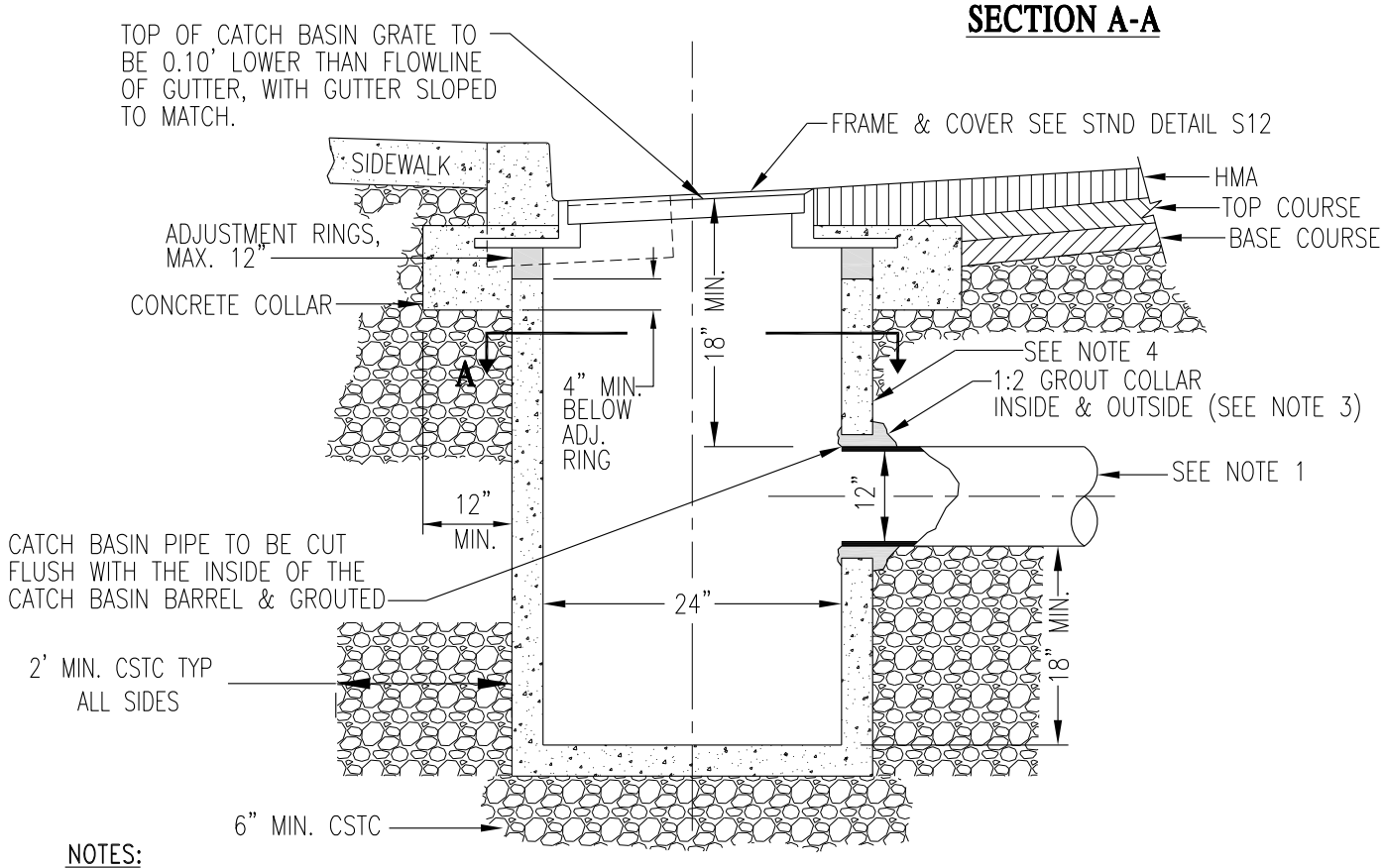

NOTES:

1. C900 PIPE TO BE USED WHEN PIPE COVER IS LESS THAN 18". MAXIMUM NUMBER AND SIZE OF PIPE CONNECTING TO CATCH BASIN SHALL NOT EXCEED 3-12" PIPES.
2. FILTER SOCK TO BE INSTALLED OVER TOP OF CATCH BASIN GRATE PER DETAIL. REMOVE ONLY WHEN DIRECTED BY CITY ENGINEER.
3. 1:2 GROUT BETWEEN CATCH BASIN RING AND CONCRETE TILE, BOTH INSIDE, OUTSIDE AND INSTALL A 12" CONCRETE COLLAR A MINIMUM 4" BELOW ADJUSTMENT RINGS. ADJUSTMENTS 2" AND GREATER TO BE MADE WITH PRECAST CONCRETE RINGS.
4. WIRE REINFORCED PRECAST CATCH BASIN SHALL BE REQUIRED WHEN 3-12" PIPES ARE TO BE CONNECTED.
5. A STORM DRAIN CATCH BASIN MANHOLE SHALL BE USED WHEN ITS DEPTH IS 4.5' OR MORE FROM INVERT TO TOP OF RIM, AND OR MORE THAN 3-12" PIPES ARE CONNECTED.

Richland Washington

TYPE 1 STORM DRAIN CATCH BASIN

PUBLIC WORKS ENGINEERING	
APPR. BY: PKR	DATE: 03.16
DRAWN BY: JLC	DWG: S11
CAD FILE: 2016_S11_03_2016	

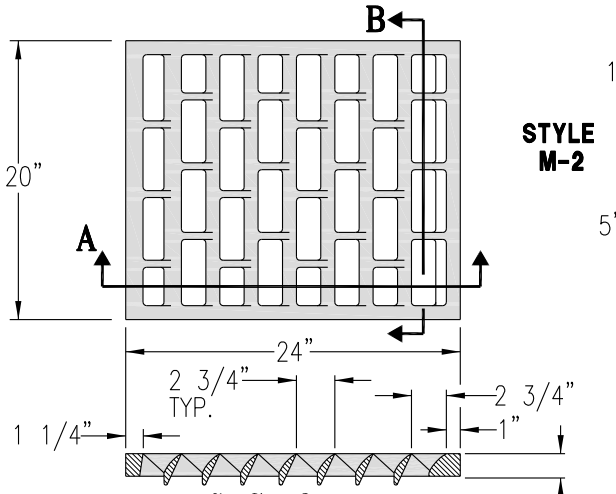

SECTION A-A
1-DIRECTIONAL FLOW

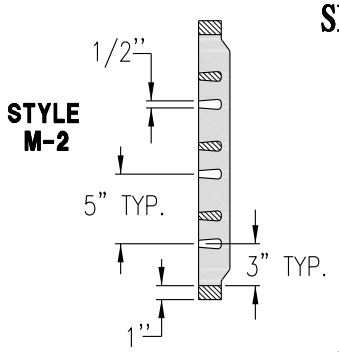

SECTION B-B

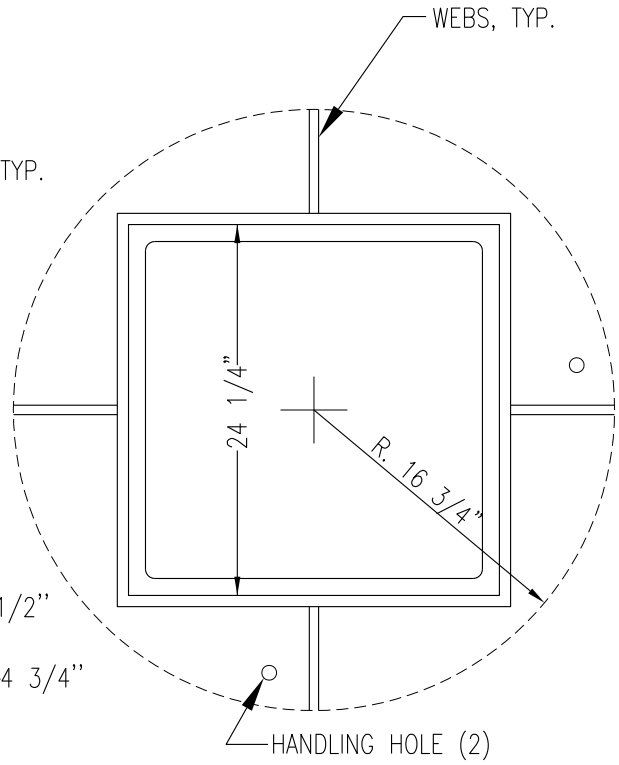

FRAME

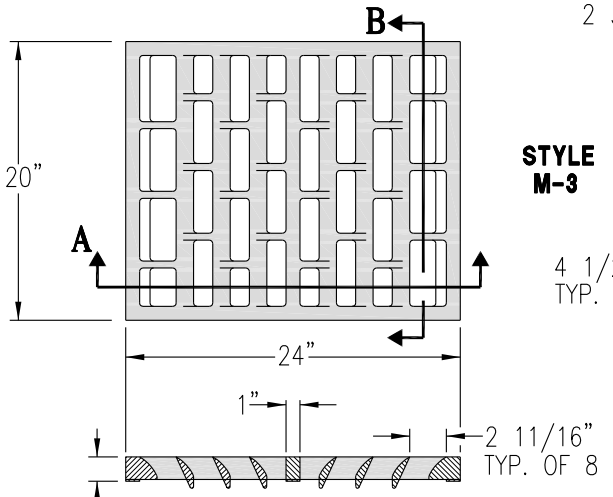

SECTION A-A
2-DIRECTIONAL FLOW

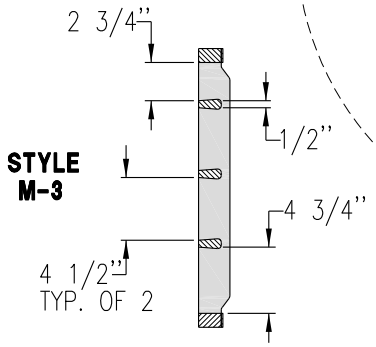

SECTION B-B

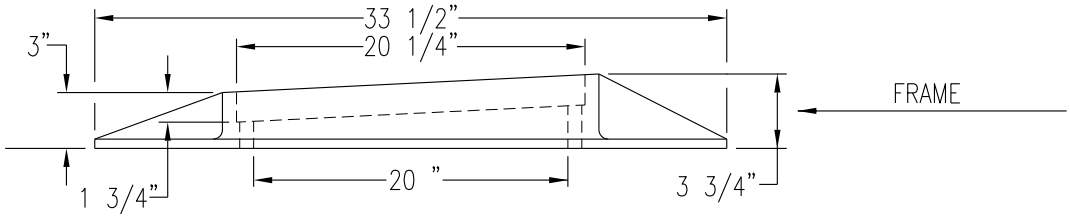

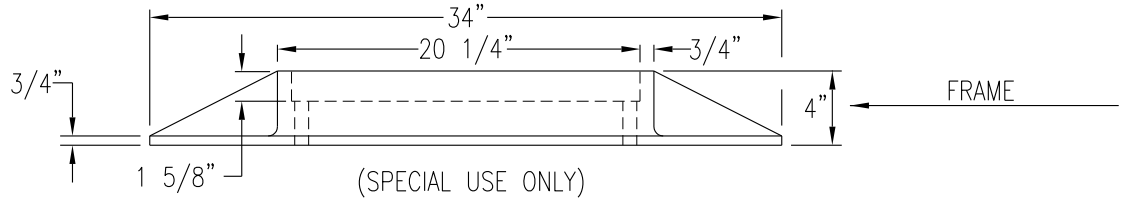

Richland Washington

STORM DRAIN CATCH BASIN FRAME & COVER

PUBLIC WORKS ENGINEERING	
APPR. BY: PKR	DATE: 12.2010
DRAWN BY: LD	DWG: S12
CAD FILE: 2012_S12_12_2010	

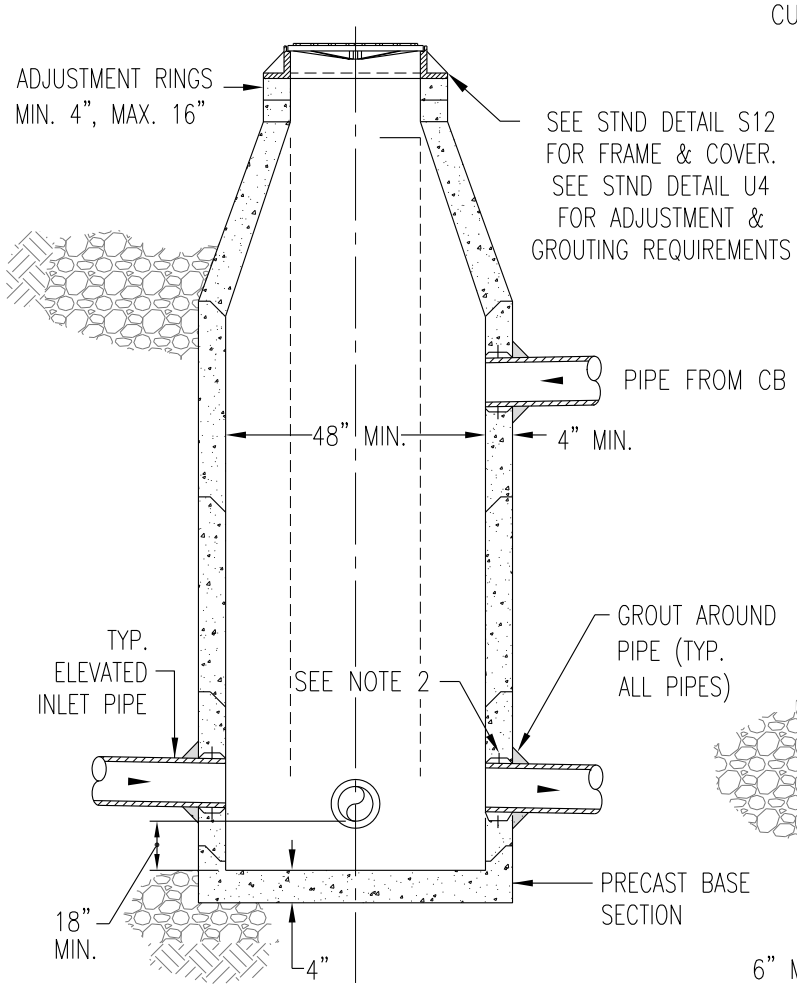

SECTION A-A

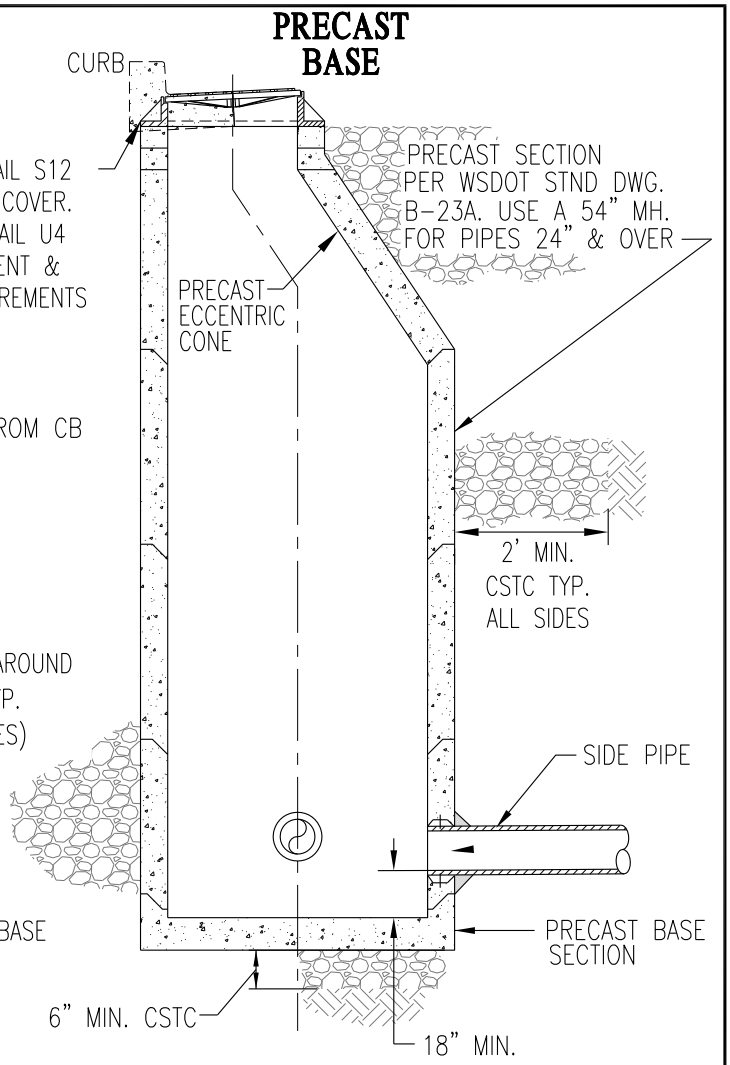

SECTION B-B

NOTES:

1. IN GROUNDWATER INSTALLATIONS: ALL MANHOLE JOINTS SHALL BE MADE USING A CONTINUOUS FLEXIBLE RUBBER MANHOLE GASKET JOINT. ALL HOLES, JOINTS, CONNECTIONS SHALL BE SEALED WITH GROUT ON THE OUTSIDE.
2. ALL NEW PRECAST MANHOLES SHALL BE PROVIDED WITH CAST-IN FLEXIBLE PIPE CONNECTORS. NO PIPE PENETRATIONS ALLOWED INTO PRECAST CONE SECTIONS.
3. A SHALLOW MANHOLE SHALL BE USED WHEN IT'S DEPTH IS 5.5' OR LESS FROM INVERT TO TOP OF RIM.

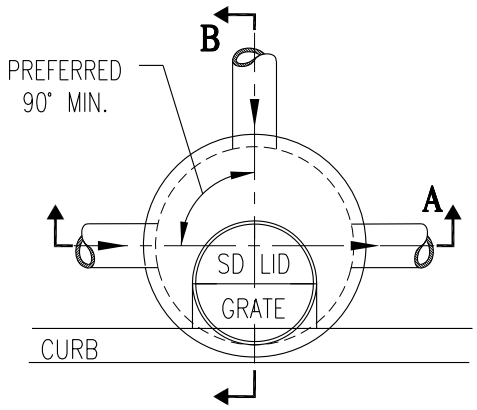

PLAN

Richland Washington

STORM DRAIN CATCH BASIN MANHOLE

PUBLIC WORKS ENGINEERING	
APPR. BY: PKR	DATE: 10.2019
DRAWN BY: EY	DWG: S13
CAD FILE: 2013_S13_03_2018	

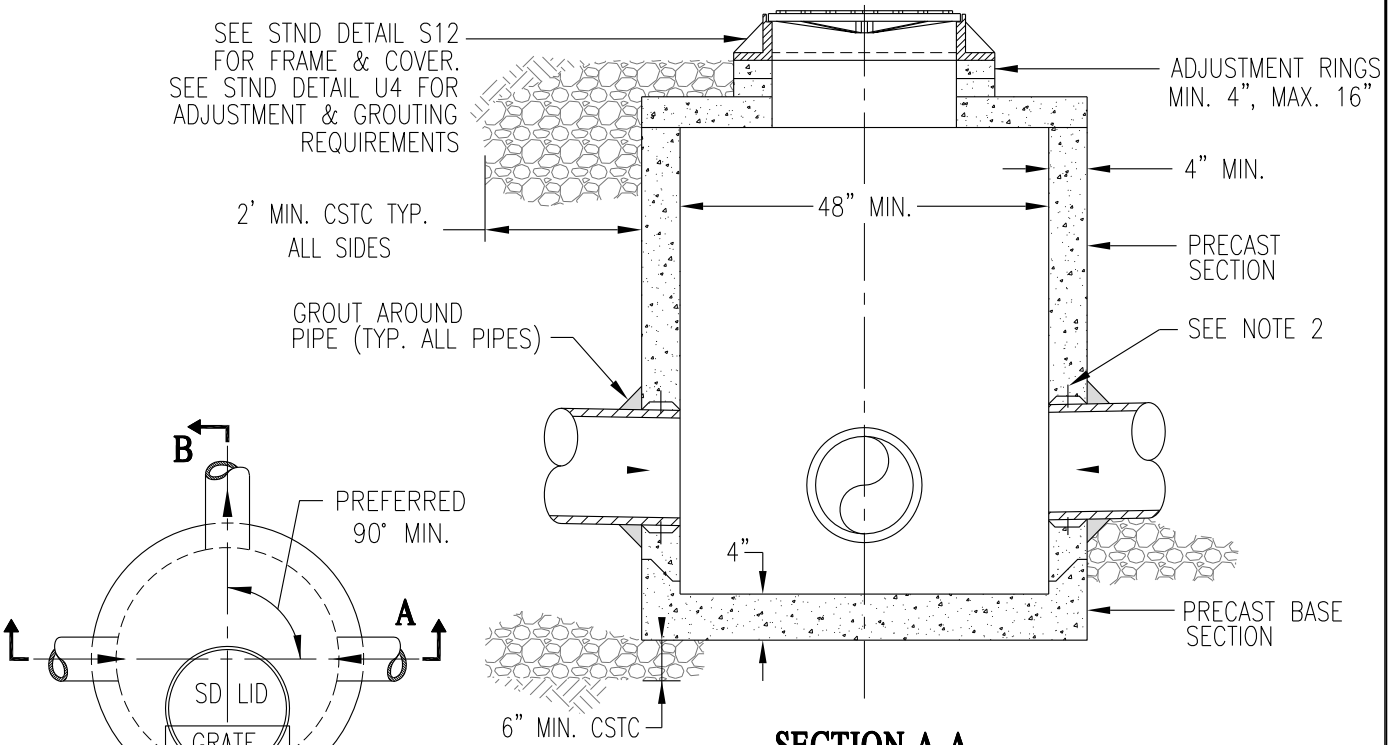

SECTION A-A

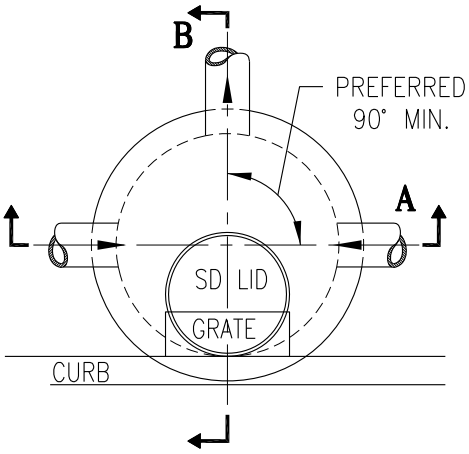

PLAN

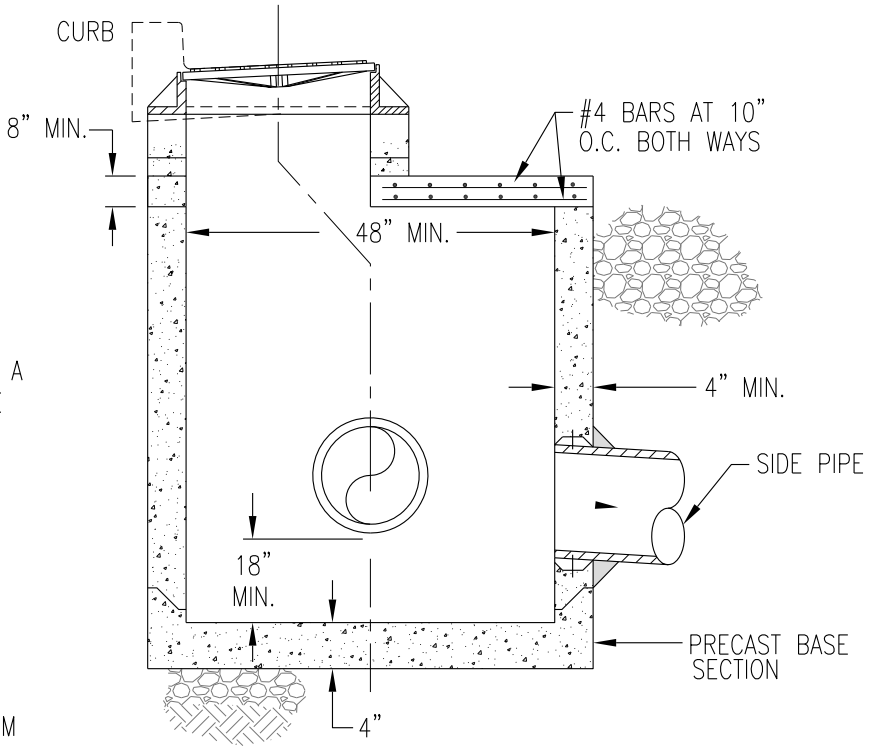

SECTION B-B

NOTES:

1. IN GROUNDWATER INSTALLATIONS: ALL MANHOLE JOINTS SHALL BE MADE USING A CONTINUOUS FLEXIBLE RUBBER MANHOLE GASKET JOINT. ALL HOLES, JOINTS, CONNECTIONS SHALL BE SEALED WITH GROUT ON THE OUTSIDE.
2. ALL NEW PRECAST MANHOLES SHALL BE PROVIDED WITH CAST-IN FLEXIBLE PIPE CONNECTORS.
3. A STANDARD MANHOLE SHALL BE USED WHEN IT'S DEPTH IS 5.5' OR MORE FROM INVERT TO TOP OF RIM.

Richland Washington

SHALLOW STORM DRAIN CATCH BASIN MANHOLE

PUBLIC WORKS ENGINEERING	
APPR. BY: PKR	DATE: 10.2019
DRAWN BY: EY	DWG: S14
CAD FILE: 2013_S14_03_2018	

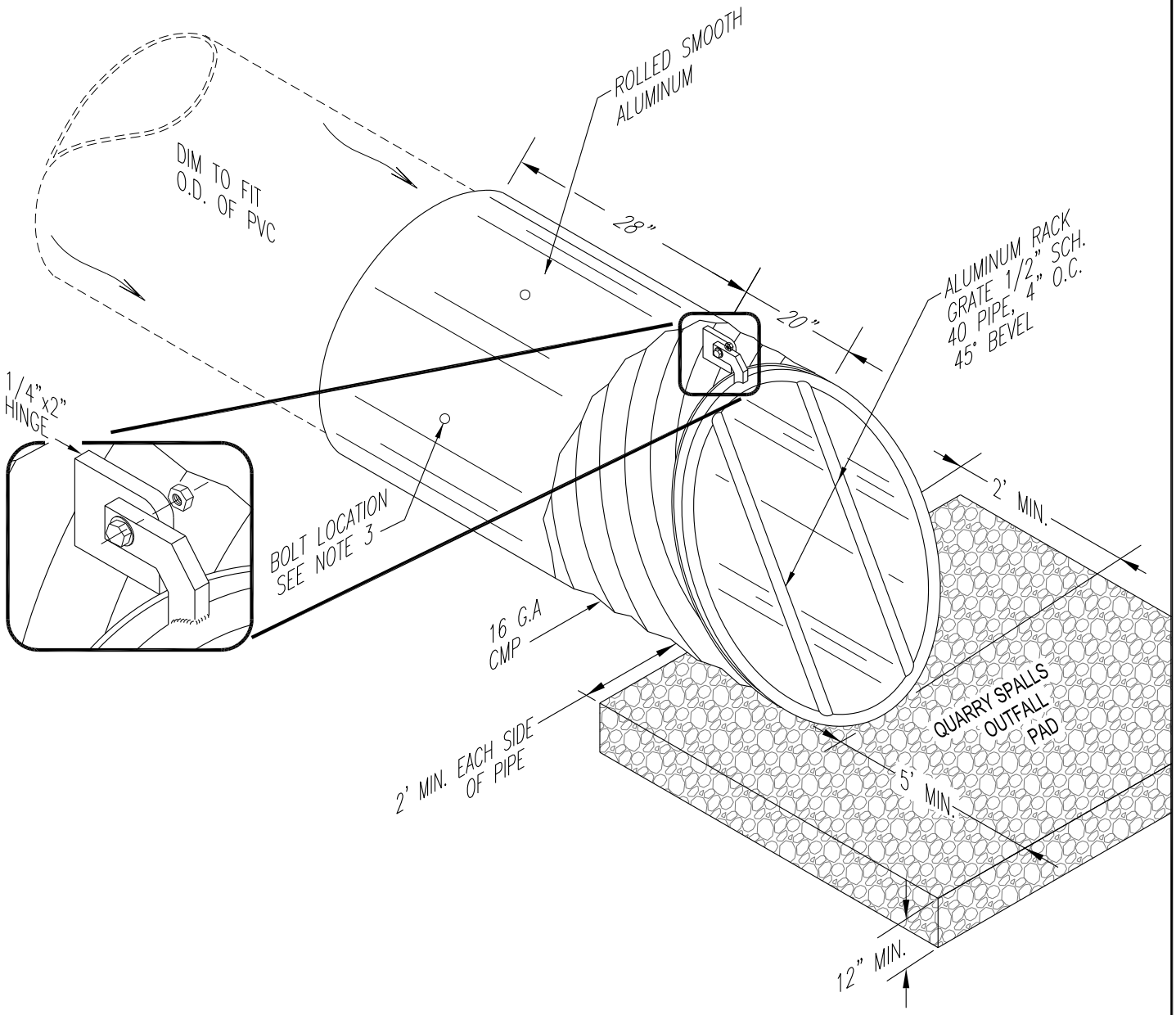

NOTES:

1. CONTRACTOR TO VERIFY ALL DIMENSIONS.
2. ALL PARTS MUST BE ALUMINUM WITH GALVANIZED HARDWARE.
3. SECURE DEBRIS BARRIER SECTION TO PIPE, USING 3 BOLTS INSTALLED AT 3, 9 AND 12 O'CLOCK, WITH HEAD OF BOLT ON THE INSIDE OF THE PIPE.
4. BAR FRAME OUTSIDE RING AND VERTICAL BARS TO BE WELDED INTO ONE RIGID UNIT.
5. WELDED VERTICAL BARS TO OUTSIDE RING.
6. PIPE SIZE, LOCATION AND INVERT PER PLANS.
7. FABRICATED OUTSIDE RING OF FRAME TO FIT OVER TOP OF BEVELED PIPE.

Richland Washington

ALUMINUM TRASH GRATE DETAIL

PUBLIC WORKS ENGINEERING	
APPR. BY: PKR	DATE: 09.13
DRAWN BY: LD	DWG: S15
CAD FILE: 2013_S15_09_2013	

EXAMPLE EROSION CONTROL PLAN

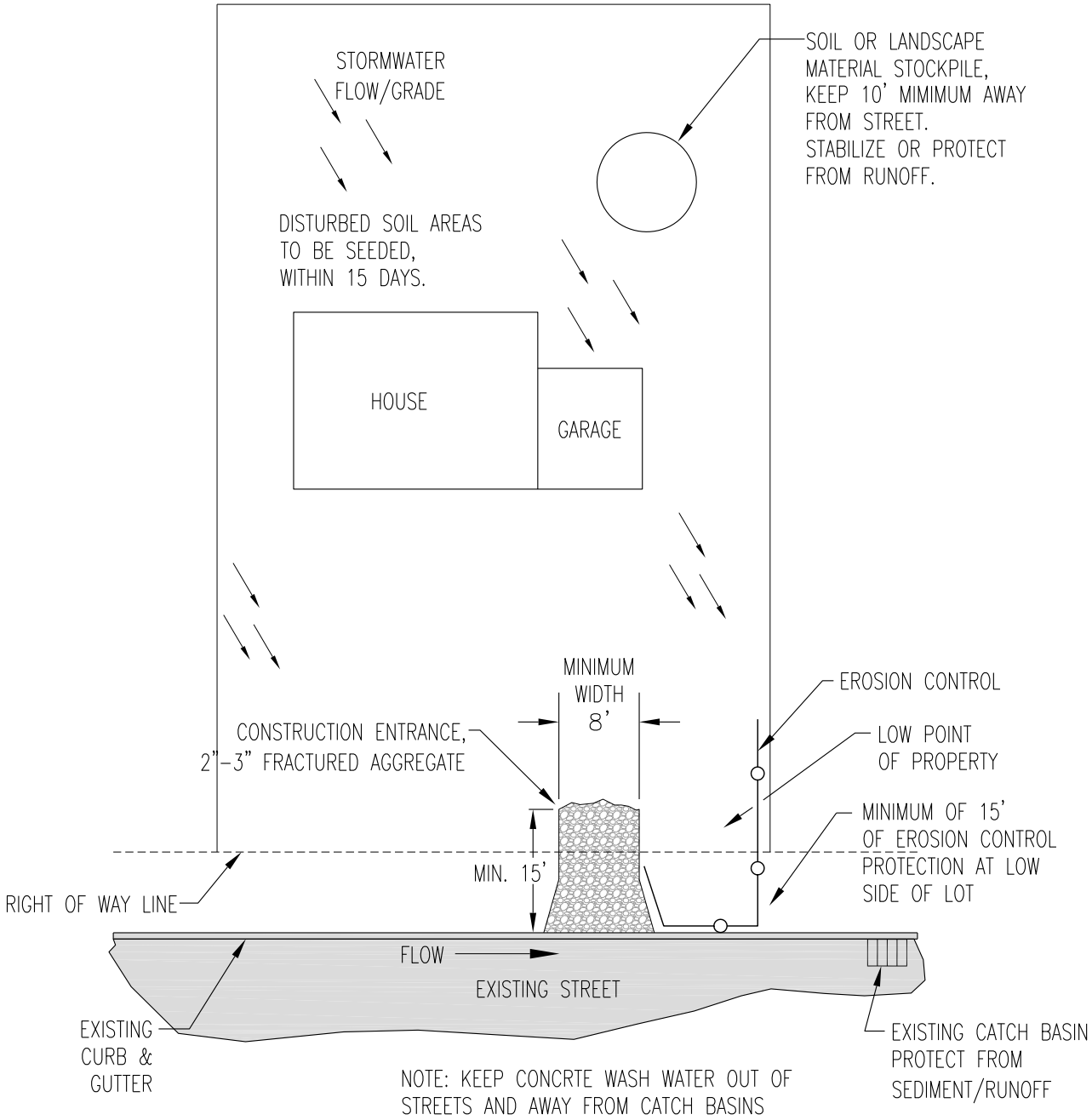

EROSION CONTROL MEASURES

KEEP RUNOFF OUT OF THE STREET WITH ONE OF THE FOLLOWING METHODS:

1. SILT FENCING OR
2. EXCAVATE 5-FEET x 6-INCH DEEP BEHIND CURB AND STABILIZE WITH HYDRO SEED, ROCK OR MULCH. (SEE DETAIL AT RIGHT)

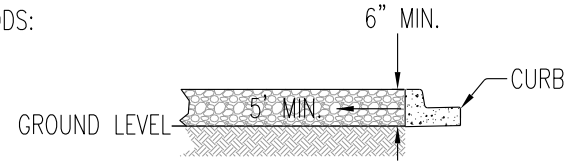

DETAIL

Richland Washington	EROSION CONTROL PLAN CONSTRUCTION BMP'S SHEET 1 of 3	PUBLIC WORKS ENGINEERING
		APPR. BY: PKR — DATE: 05.14
		DRAWN BY: JG — DWG: S16
		CAD FILE: 2014_S16-1_05_2014

SUGGESTED BMP'S FOR RESIDENTIAL CONSTRUCTION SITES

NOTE: PUBLIC WORKS WILL INSPECT THE SITE FOR SOIL/SEDIMENT STABILIZATION.

WARNING! EXTRA MEASURES (Beyond the BMP's) MAY BE NEEDED IF YOUR SITE:

- IS WITHIN 300-FEET OF A STREAM OR STORM DRAIN INLET THAT LEADS TO A STREAM.
- IS STEEPLY GRADED (SLOPES OF 5% OR MORE).
- RECEIVES RUNOFF FROM ADJACENT LAND.
- HAS MORE THAN AN ACRE OF DISTURBED GROUND.

Soil/Landscaping Piles:

1. DO NOT STOCKPILE SOIL OR LANDSCAPING MATERIALS IN THE STREET.
2. LOCATE AWAY FROM ANY DOWNSLOPE STREET, DRIVEWAY, STREAM, WETLAND, DITCH OR DRAINAGE WAY. COVER WITH PLASTIC OR HYDROSEED.
3. TEMPORARY DROUGHT-TOLERANT SEEDING OR TACKIFIER IS RECOMMENDED FOR TOPSOIL PILES.

Storm Drain Inlet Protection:

1. PROTECT THE NEAREST DOWNSTREAM STORM DRAIN INLET IN THE CITY STREET WITH SILT FENCES, SILT FABRIC OR EQUIVALENT MEASURES.
2. INSPECT, REPAIR AND REMOVE SEDIMENT DEPOSITS FROM LOW AREAS AND STREET AFTER EVERY STORM OR RUNOFF EVENT.

Sediment Cleanup:

1. BY THE END OF EACH WORK DAY, SWEEP OR SCRAPE UP SOIL TRACKED ONTO THE ROAD. DO NOT HOSE INTO STORM DRAIN SYSTEM.
2. BY THE END OF THE NEXT WORK DAY AFTER A STORM, CLEAN UP SOIL WASHED OFF-SITE.
3. REMEMBER TO CONTROL YOUR DUST, BUT TOO MUCH WATERING CAN LEAD TO RUNOFF OF SEDIMENT-LADEN WATER INTO THE STREET OR NEIGHBORING LOT.

Vegetation/Revegetation:

1. WHEREVER POSSIBLE, PRESERVE EXISTING TREES, SHRUBS, GRASSES AND OTHER VEGETATION.
2. SEED, SOD OR MULCH BARE SOIL AS SOON AS POSSIBLE. VEGETATION IS THE MOST EFFECTIVE WAY TO CONTROL EROSION.

Stabilized Construction Entrances (See Detail):

1. THE STABILIZED CONSTRUCTION ENTRANCE SHALL BE INSTALLED BEHIND THE CURB AT THE FUTURE DRIVEWAY LOCATION. CALL 942-7500 FOR A CURB-CUT INSPECTION PRIOR TO INSTALLATION. DO NOT PILE SOIL OR ROCK IN THE GUTTER.
2. THE ENTRANCE SHALL BE COMPOSED OF 2-INCH TO 3-INCH FRACTURED AGGREGATE STONE (WITH MINIMAL FINES). LAY THE STONE A MINIMUM OF 6" DEEP, AT LEAST 8-FEET WIDE AND A MINIMUM OF 15-FEET ONTO THE SITE, MEASURED FROM BACK OF CURB, OR THE DISTANCE TO THE FOUNDATION, WHICHEVER IS LESS.

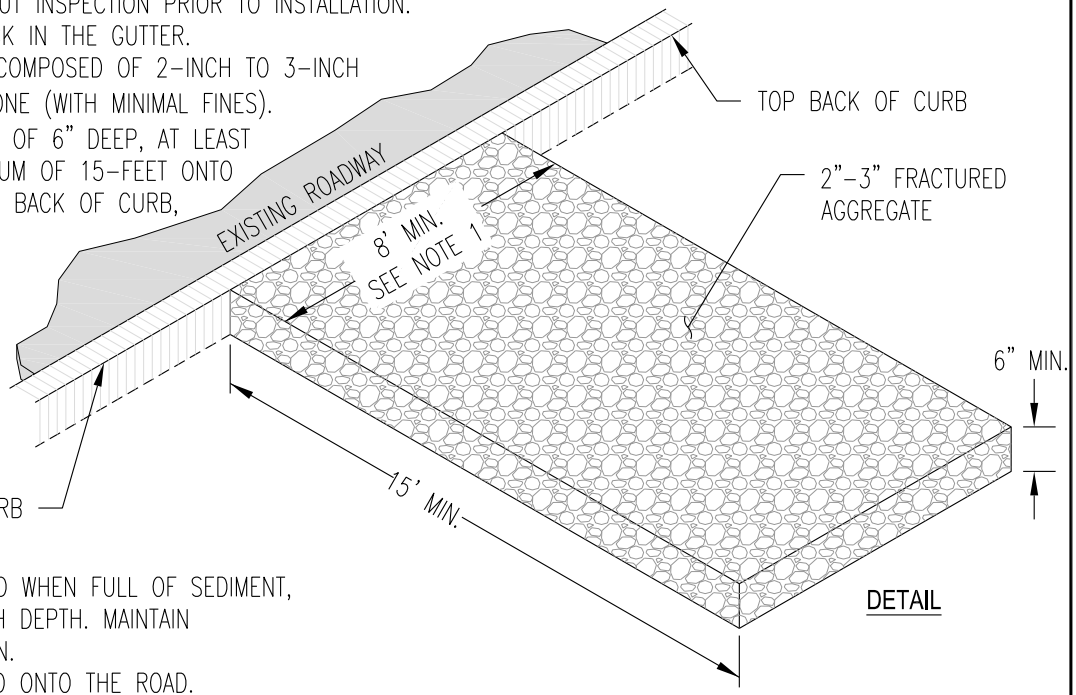

DETAIL

3. REPLACE STONE AS NEEDED WHEN FULL OF SEDIMENT, AND TO MAINTAIN A 6-INCH DEPTH. MAINTAIN THROUGHOUT CONSTRUCTION.
4. PREVENT TRACKING OF MUD ONTO THE ROAD.

Richland Washington

EROSION CONTROL PLAN
CONSTRUCTION BMP'S
SHEET 2 of 3

PUBLIC WORKS ENGINEERING	
APPR. BY: PKR	DATE: 11.15
DRAWN BY: LD	DWG: S16
CAD FILE: 2014_S16-2_11_2015	

Silt Fences :*

1. INSTALL PRIOR TO LAND DISTURBANCE.
2. INSTALL ON DOWNSLOPE SIDES OF SITE, PARALLEL TO CONTOUR OF THE LAND.
3. EXTEND ENDS UPSLOPE ENOUGH TO KEEP PONDING WATER BEHIND FENCE.
4. LEAVE NO GAPS. OVERLAP SECTIONS OF SILT FENCE, OR TWIST ENDS OF SILT FENCE TOGETHER.
5. INSPECT AND REPAIR ONCE A WEEK AND AFTER ANY RAIN/SNOWMELT EVENTS. REMOVE SEDIMENT IF DEPOSITS REACH HALF THE FENCE HEIGHT.
6. MAINTAIN UNTIL LANDSCAPING OR HYDROSEED IS ESTABLISHED.

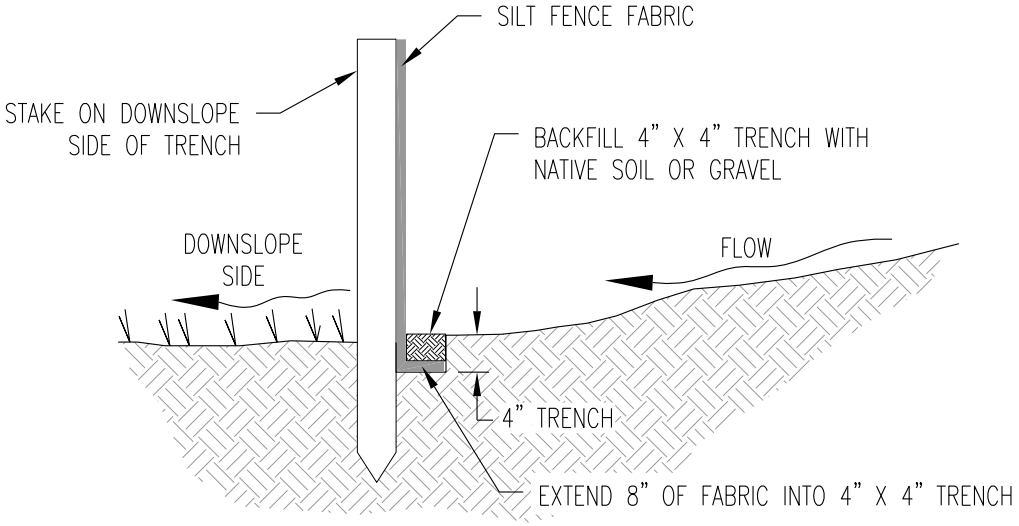

SILT FENCE INSTALLATION CROSS SECTION

*ALTERNATIVELY, IF THE STREET IS ON THE LOW SIDE OF THE LOT, GRADE THE LOT 5' BEHIND THE CURB, THEN STABILIZE WITH 2-INCH TO 3-INCH FRACTURED AGGREGATE (6" DEEP). THIS CAN BE ALLOWED IN LIEU OF SILT FENCE.

Richland Washington	EROSION CONTROL PLAN CONSTRUCTION BMP'S SHEET 3 of 3	PUBLIC WORKS ENGINEERING
		APPR. BY: PKR — DATE: 05.14
		DRAWN BY: LD — DWG: S16
		CAD FILE: 2014_S16-3_05_2014

NOTES:

1. ALL NEW PRECAST MANHOLES SHALL BE PROVIDED WITH CAST-IN FLEXIBLE PIPE CONNECTORS.

2. ALL MANHOLE JOINTS SHALL BE MADE USING A CONTINUOUS FLEXIBLE RUBBER MANHOLE GASKET, OR FULL BED GROUT JOINT.

3. EXTEND ALL PIPE INVERTS SO THEY ARE AT THE VERTICAL EDGE OF THE MANHOLE OPENING. CUT PIPES BELOW SPRING LINE.

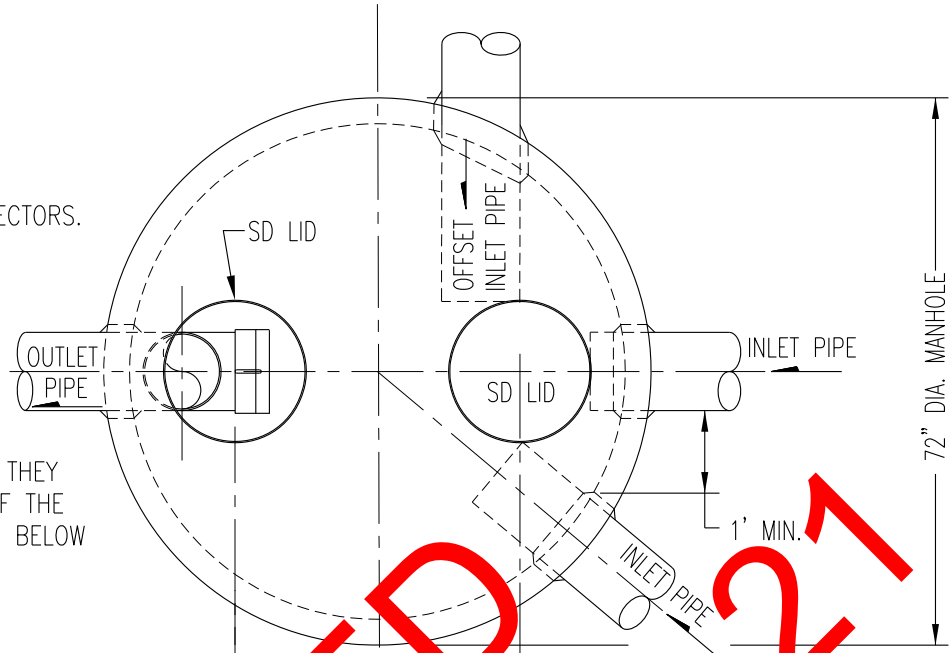

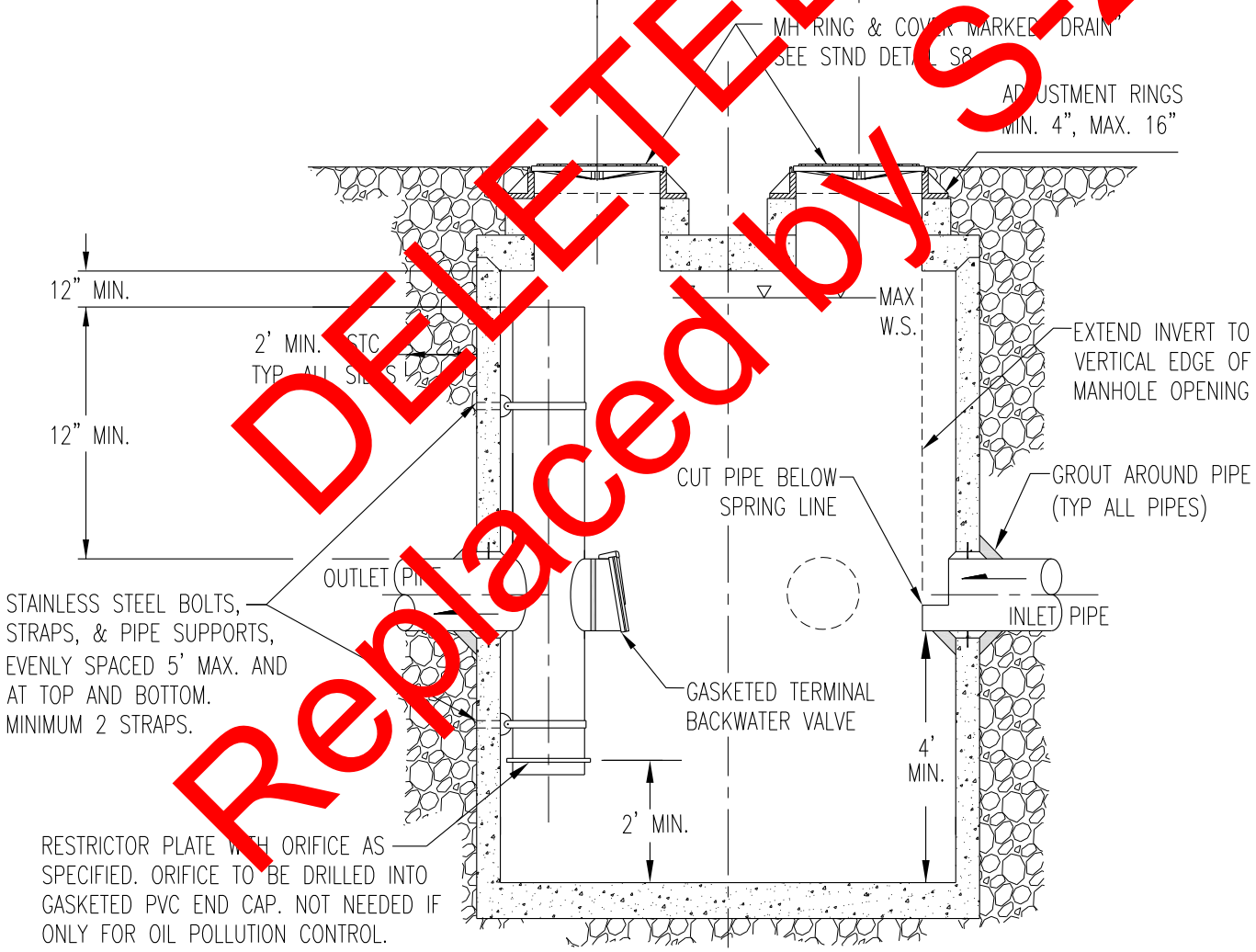

DELETED
Replaced by S-21

Richland Washington

SPILL CONTROL SEPARATOR

PUBLIC WORKS ENGINEERING	
APPR. BY: PKR	DATE: 07.17
DRAWN BY: LD	DWG: S17
CAD FILE: 2014_S17_07_2017	

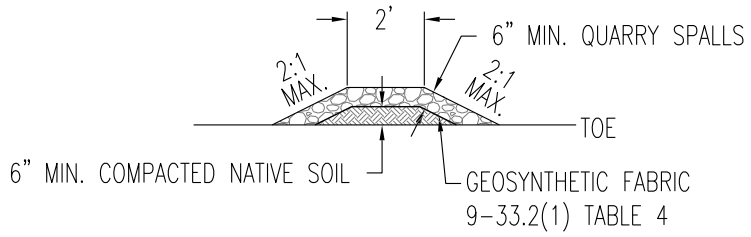

SECTION B-B

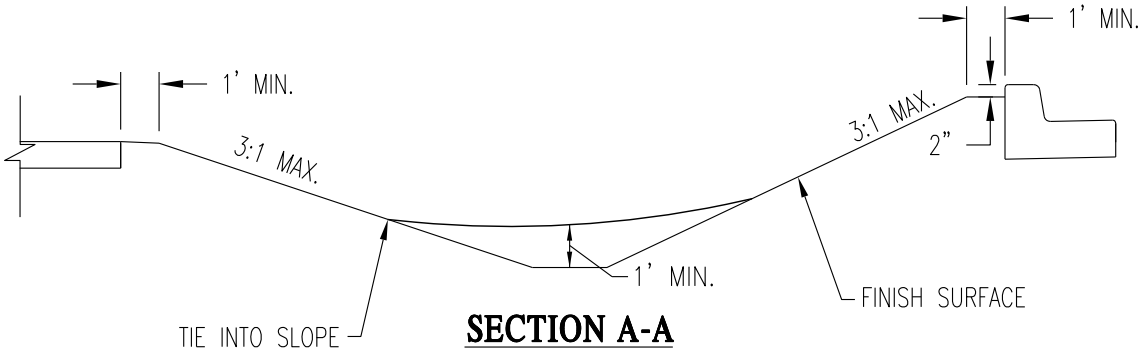

SECTION A-A

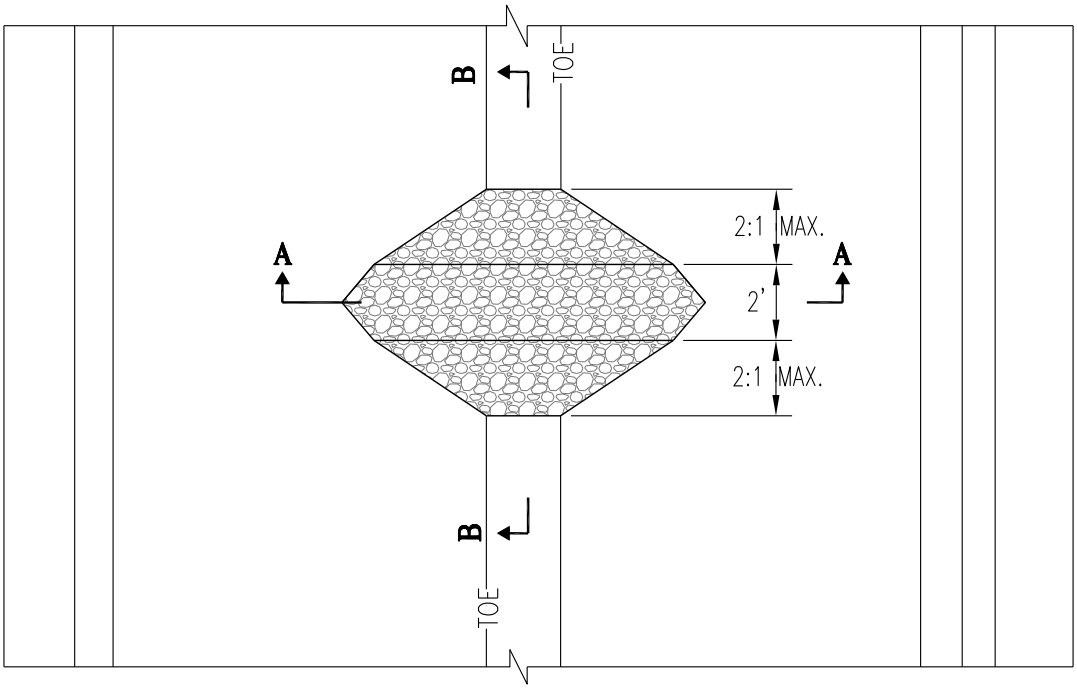

PLAN VIEW

NOT TO SCALE

Richland Washington	ROADSIDE SWALE/ CHECK DAM DETAIL	PUBLIC WORKS ENGINEERING
		APPR. BY: PKR — DATE: 09.13
		DRAWN BY: LD — DWG: S18
		CAD FILE: 2013_S18_09_2013

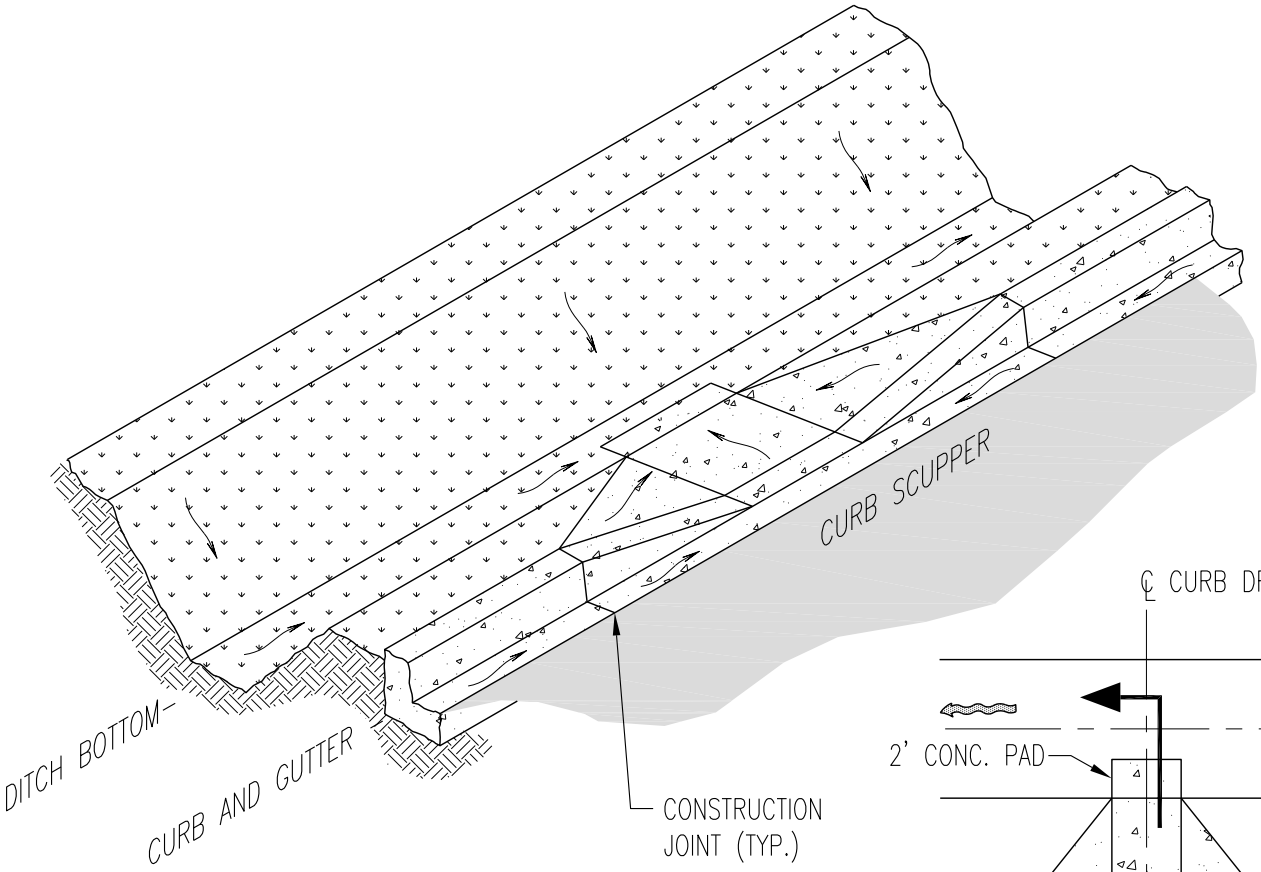

ISOMETRIC
NOT TO SCALE

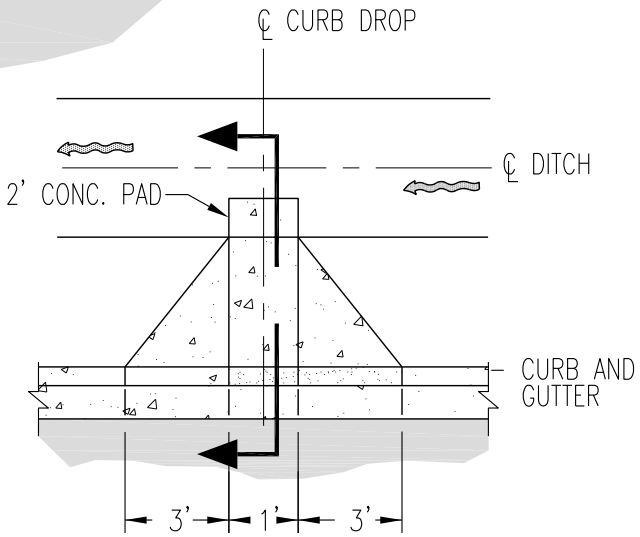

PLAN VIEW
NOT TO SCALE

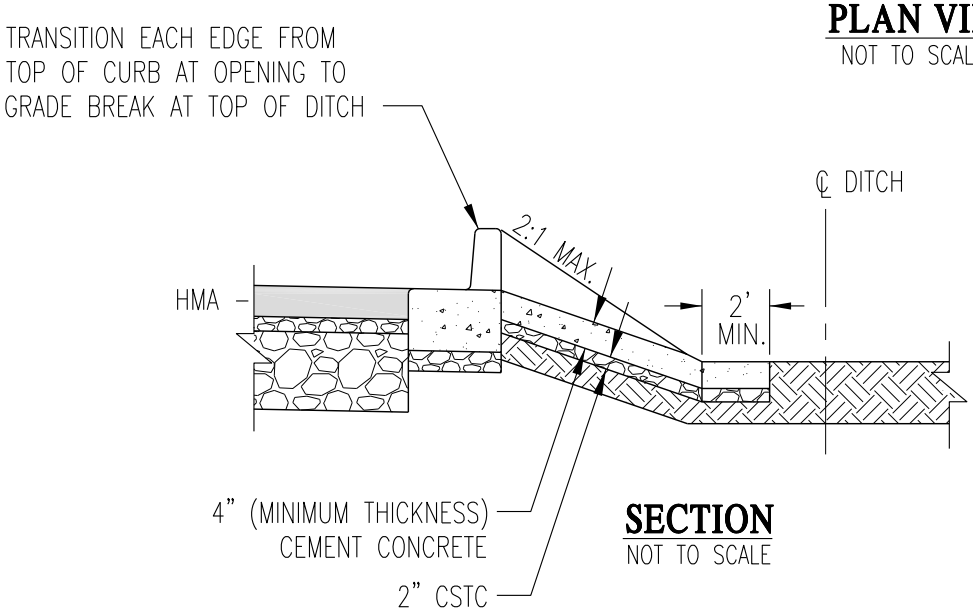

SECTION
NOT TO SCALE

Richland Washington

CURB OPENING INLET DETAIL

PUBLIC WORKS ENGINEERING	
APPR. BY: PKR	DATE: 12.14
DRAWN BY: LD	DWG: S19
CAD FILE: 2013_S19_12_2014	

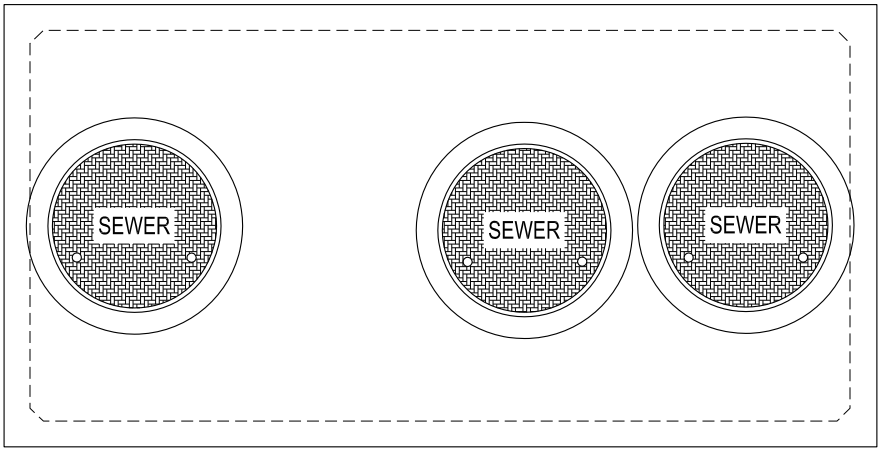

PLAN VIEW
NOT TO SCALE

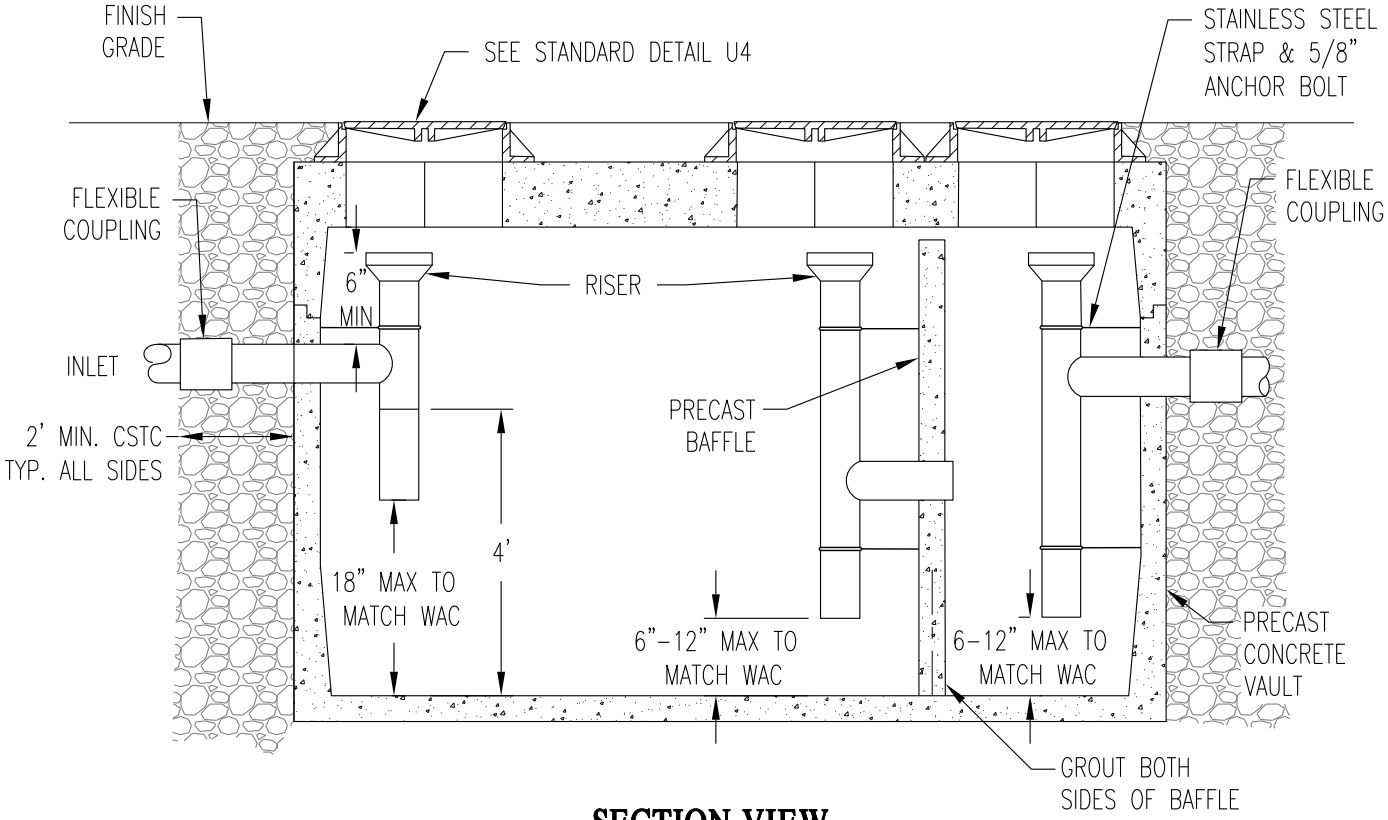

SECTION VIEW
NOT TO SCALE

NOTE:

1. STANDARD DETAIL S20A FOR NOTES.

Richland Washington	TYPICAL GREASE INTERCEPTOR	PUBLIC WORKS ENGINEERING
		APPR. BY: PKR — DATE: 05.14
		DRAWN BY: LD — DWG: S20
		CAD FILE: 2014_S20_05_2014

NOTES FOR GREASE INTERCEPTORS:

1. THIS DEVICE SHALL MEET THE REQUIREMENTS IN THE WAC 246-272C-0230.

2. POSITION RISERS BELOW ACCESS OPENINGS TO ALLOW CLEAR ACCESS TO RISER AND VAULT CHAMBER.

3. CONNECTIONS TO CONCRETE WALL WITH PVC PIPE, REQUIRE KOR-N-SEAL CONNECTORS OR ACxPVC BRANT ADAPTER. SEAL ALL PIPE CONNECTIONS WITH NON-SHRINK GROUT.

4. FILL WITH CLEAN WATER PRIOR TO START UP OF SYSTEM.

5. THE PLANS AND SPECIFICATIONS SHALL ILLUSTRATE PROPERTY BOUNDARIES, PIPING/DRAINAGE DETAILS AND CONNECTIONS TO THE SANITARY SEWER. DETAIL AND ELEVATIONS DRAWINGS OF THE GREASE INTERCEPTOR SHALL INCLUDE UPC APPENDIX DESIGN CALCULATIONS TO SHOW CAPACITY, DETENTION TIME AND REMOVAL EFFICIENCIES.

6. EFFLUENT FROM GREASE INTERCEPTORS SHALL NOT EXCEED 100mg/L TOTAL FAT, OILS AND GREASE DISCHARGED TO THE SANITARY SEWER.

7. GREASE INTERCEPTORS INSTALLED IN PAVED AREAS SHALL COMPLY WITH H-20 LOADING.

8. THE GREASE INTERCEPTOR SHALL BE INSTALLED AND CONNECTED SUCH THAT IT SHALL BE EASILY ACCESSIBLE FOR INSPECTION AND CLEANING AT ALL TIMES. NO SANITARY WASTEWATER SHALL BE CONVEYED TO THE SEPARATOR. A SEPARATE SIDE SEWER SHALL BE REQUIRED TO CARRY SANITARY WASTEWATER TO THE SEWER MAIN. IT SHALL BE PLACED AS CLOSE TO THE SERVICE AS PRACTICAL. MANHOLE COVERS SHALL HAVE AN OPENING OF 24 INCHES IN DIAMETER.

9. PLUMBING/PIPING SHALL BE CONSTRUCTED TO ESTABLISH "PARALLEL FLOW" (90° TO THE TANK BAFFLE) THROUGH THE GREASE INTERCEPTOR. NO RADIUS, BEND OR ELBOW SHALL BE ALLOWED IN THE INLET PIPE FOR A MINIMUM OF 10 FEET OR 20 PIPE DIAMETERS (WHICHEVER IS GREATER) UPSTREAM OF THE INTERCEPTOR.

10. VENTING OF THE INTERCEPTOR SHALL IN ACCORDANCE WITH CHAPTER 4, 5, AND 7 OF THE UNIFORM PLUMBING CODE - 1988 OR AS ADOPTED BY THE CITY.

11. THE DESIGN ENGINEER SHALL PROVIDE THE CITY ENGINEER OR HIS REPRESENTATIVE WITH A LETTER OF INSPECTION CERTIFYING THAT THE INSTALLATION WAS PERFORMED IN ACCORDANCE WITH ALL REGULATIONS AND THE APPROVED PLAN.

12. FINAL INSPECTION IS REQUIRED BY THE CITY ENGINEER OR HIS REPRESENTATIVE PRIOR TO CONNECTION TO THE SANITARY SEWER.

13. THE PROPERTY OWNER SHALL RETAIN OWNERSHIP OF THE GREASE INTERCEPTOR AND SIDE SEWER LINES AND SHALL BE RESPONSIBLE FOR THEIR OPERATION AND MAINTENANCE. A MAINTENANCE RECORD SHALL BE KEPT ON THE PREMISES AT ALL TIMES AND SHALL BE IMMEDIATELY AVAILABLE TO THE CITY ENGINEER OR HIS REPRESENTATIVE UPON REQUEST.

14. THE PROPERTY OWNER SHALL REPORT IMMEDIATELY TO THE CITY ENGINEER OR HIS REPRESENTATIVE, ANY SPILL, SURCHARGE, BYPASS, OR MECHANICAL FAULT OR FAILURE WHICH INTERRUPTS OR OTHERWISE REDUCES THE CAPACITY OR REMOVAL EFFICIENCY OF THE GREASE INTERCEPTOR.

15. GREASE INTERCEPTOR SHALL NOT BE PLACED IN PARKING STALLS OR DRIVE-THROUGHS UNLESS NO OTHER FEASIBLE LOCATION IS AVAILABLE AND PERMISSION IS GRANTED BY THE CITY ENGINEER OR HIS REPRESENTATIVE.

Richland Washington

TYPICAL GREASE INTERCEPTOR NOTES

PUBLIC WORKS ENGINEERING	
APPR. BY: PKR	DATE: 05.14
DRAWN BY: LD	DWG: S20A
CAD FILE: 2014_S20_05_2014	

NOTES:

1. ATTACH THE PIPE SUPPORTS TO THE MANHOLE WITH $\frac{5}{8}$" STAINLESS STEEL EXPANSION BOLTS OR EMBED THE SUPPORTS INTO THE MANHOLE WALL 2".

2. THE FRAME SHALL BE OFFSET SO THAT THE CLIMB-DOWN SPACE IS CLEAR OF THE RISER.

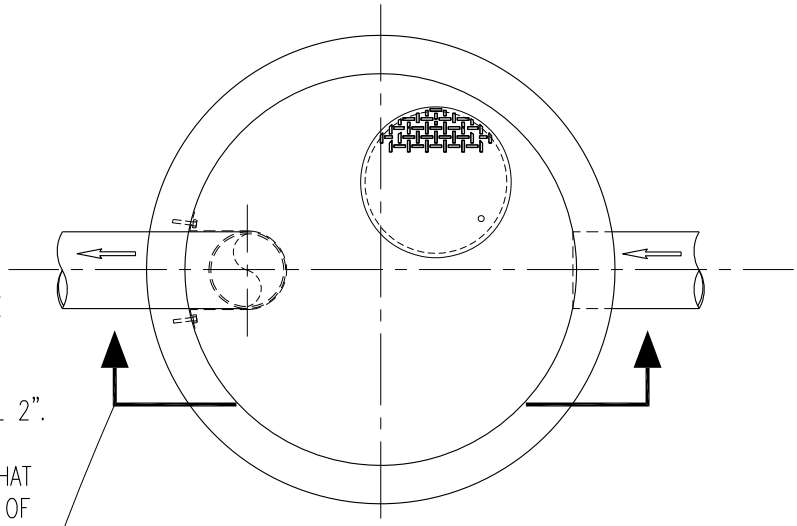

PLAN

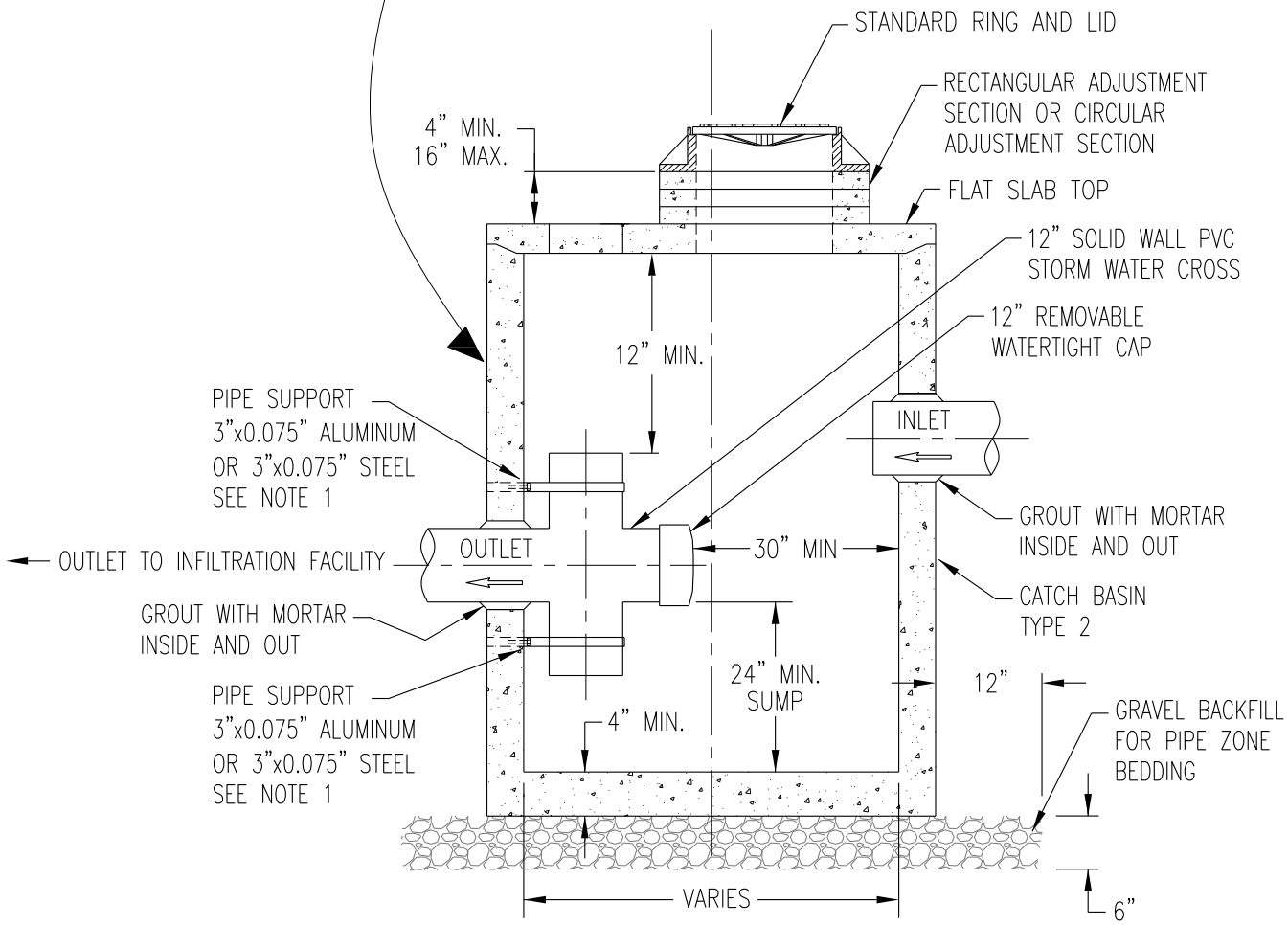

SECTION

Richland Washington	SEDIMENTATION MANHOLE DETAIL	PUBLIC WORKS ENGINEERING
		APPR. BY: PKR — DATE: 06.19
		DRAWN BY: EY — DWG: S21
		CAD FILE: 2018_S21_06_2019