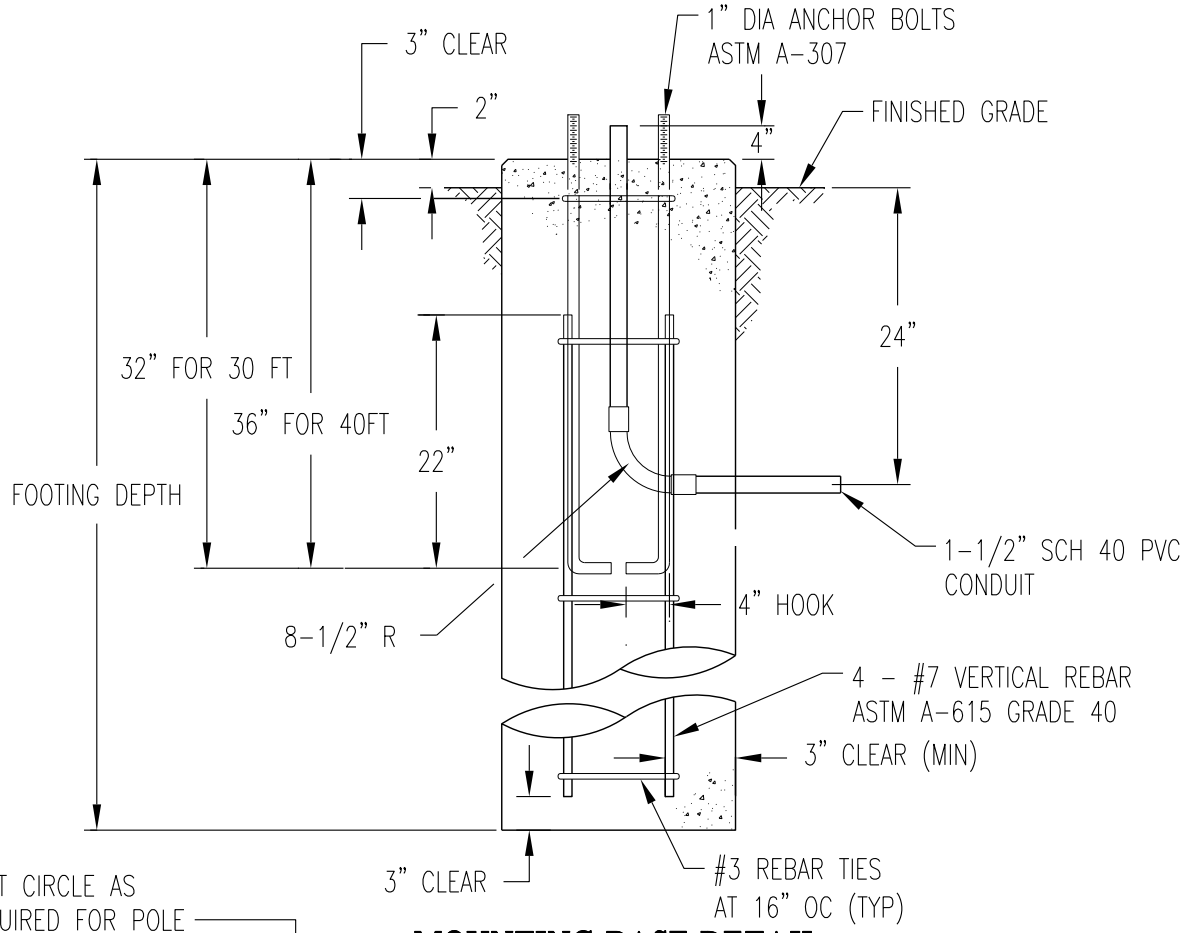

MOUNTING BASE DETAIL

NOTE:
CONCRETE STRENGTH = 4000 PSI CONCRETE CLASS 4000P.
CONCRETE STRENGTH = 2400 PSI PRIOR TO SETTING POLE.

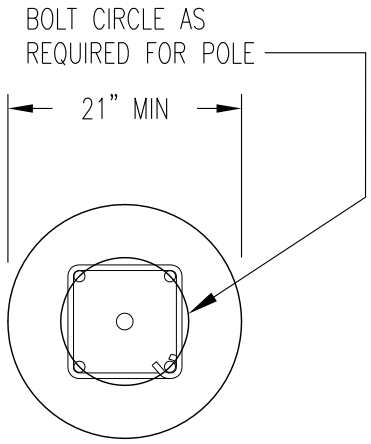

MOUNTING BASE TOP VIEW

POLE LENGTH (FEET)	MINIMUM FOOTING DEPTH IN FEET SEE SOIL TABLE		
	A	B	C
30	5'0"	6'6"	8'0"
40	5'6"	7'0"	8'6"

SOIL TYPE	CLASS OF MATERIAL (UNIFORM BUILDING CODE)
A	GOOD-COMPACT WELL-GRADED SAND AND GRAVEL. HARD CLAY WELL-GRADED FINE AND COARSE SAND (ALL DRAINED SO WATER WILL NOT STAND)
B	AVERAGE-COMPACT FINE SAND MEDIUM CLAY COMPACT SANDY LOAM LOOSE COARSE SAND AND GRAVEL (ALL DRAINED SO WATER WILL NOT STAND.)
C	POOR-SOFT CLAY CLAY LOAM POORLY COMPACTED SAND CLAYS CONTAINING LARGE AMOUNTS OF SILT (WATER STANDS DURING WET SEASON)

NOTE:

FORMING MATERIALS (SONOTUBE) SHALL BE REMOVED FROM THE TOP OF THE FOUNDATION TO SIX INCHES BELOW FINISHED GRADE AFTER CONCRETE HAS HAD A CHANCE TO SET UP.

SOIL BELOW MOUNTING BASE TO BE UNDISTURBED.

Richland Washington

STREET LIGHTING MOUNTING BASE DETAILS CONCRETE SUPPORT

PUBLIC WORKS ENGINEERING	
APPR. BY: PKR	DATE: 11.15
DRAWN BY: LD	DWG: SL-3
CAD FILE: 2015_SL3_11_2015	