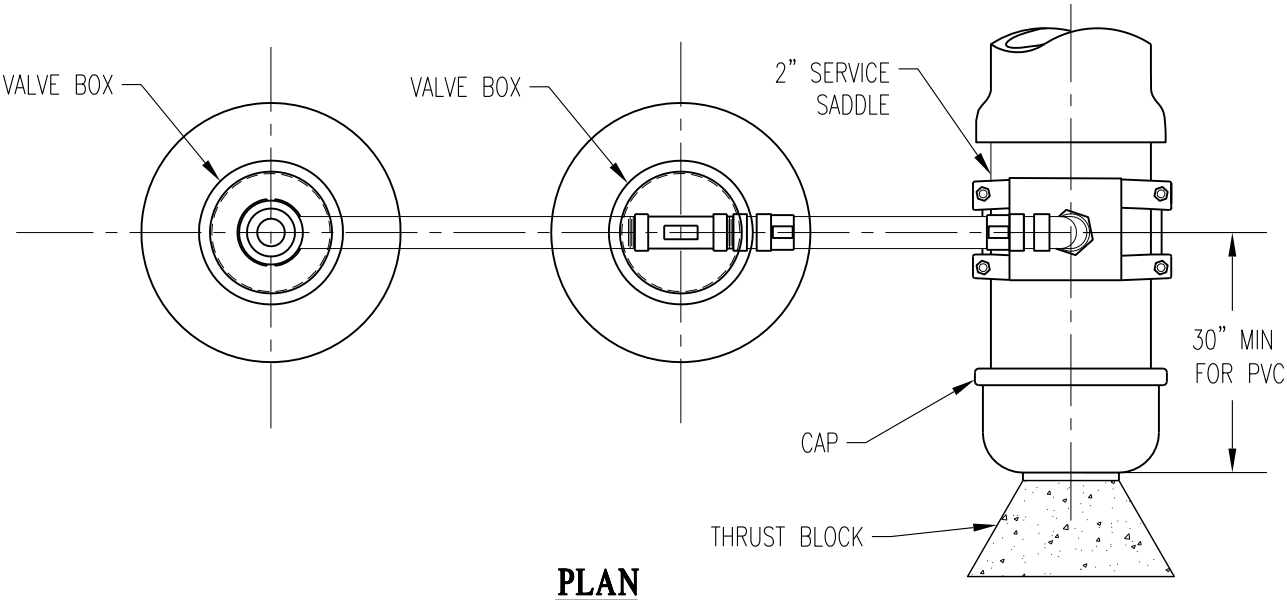

PLAN

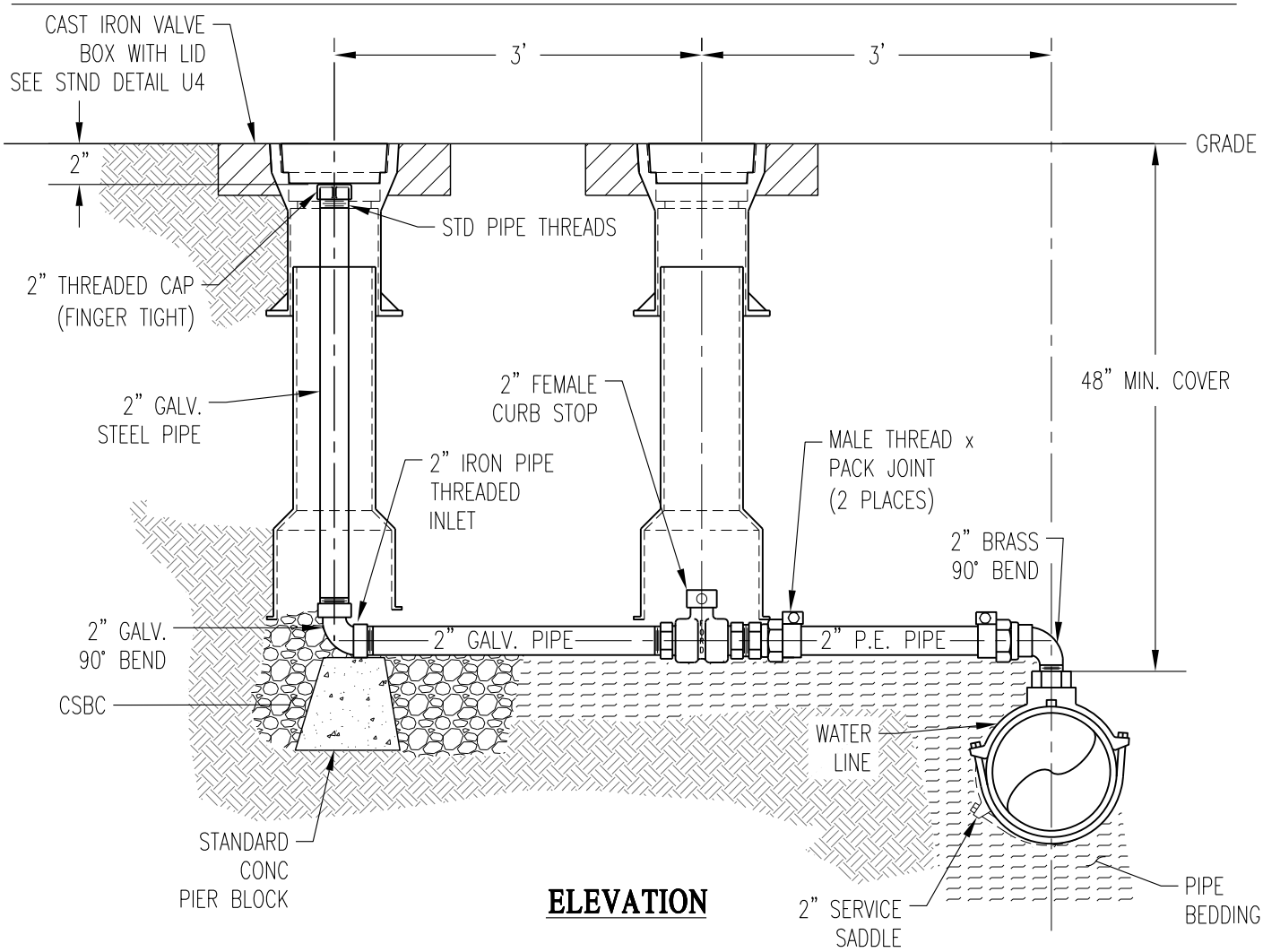

ELEVATION

TEMPORARY BLOW-OFF ASSEMBLY

PUBLIC WORKS ENGINEERING	
APPR. BY: PKR	DATE: 11.15
DRAWN BY: LD	DWG: W13A
CAD FILE: 2012_W13A_11_2015	