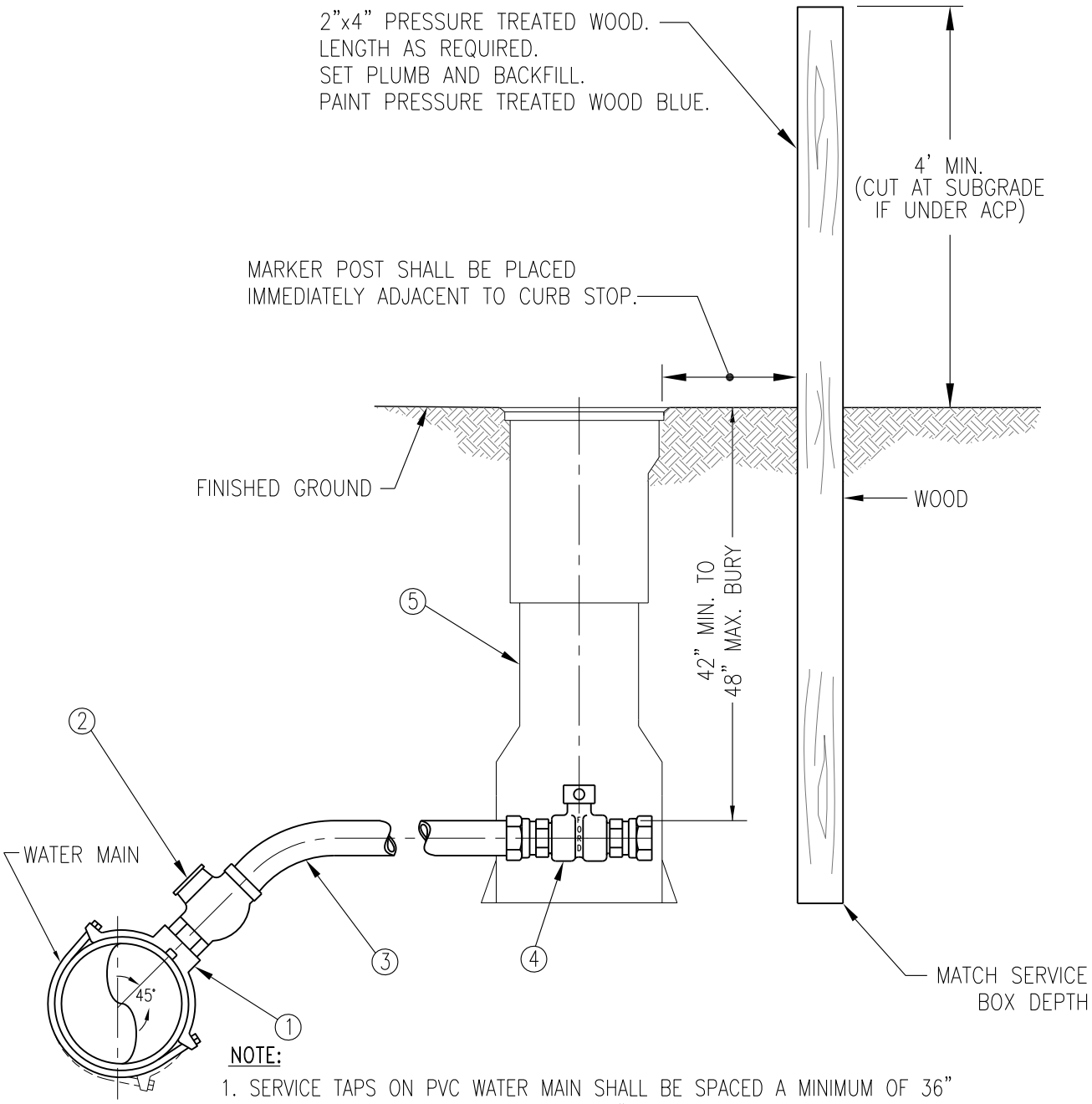

NOTE:

1. SERVICE TAPS ON PVC WATER MAIN SHALL BE SPACED A MINIMUM OF 36" IF TAPPED ON THE SAME SIDE AND 18" IF STAGGERED. TAP SHALL BE NO CLOSER THAN 24" FROM PIPE BELL.

MATERIAL LIST		
ITEM NO.	NO. REQ'D	DESCRIPTION
1	1	SERVICE SADDLE
2	1	CORPORATION STOP
3	1	1" "K-TYPE" COPPER TUBING-CONTINUOUS, NO JOINTS ALLOWED
4	1	CURB STOP
5	1	SERVICE BOX

Richland Washington

1" STREET SERVICE ASSEMBLY

PUBLIC WORKS ENGINEERING	
APPR. BY: PKR	DATE: 09.13
DRAWN BY: LD	DWG: W1
CAD FILE: 2013_W1_09_2013	

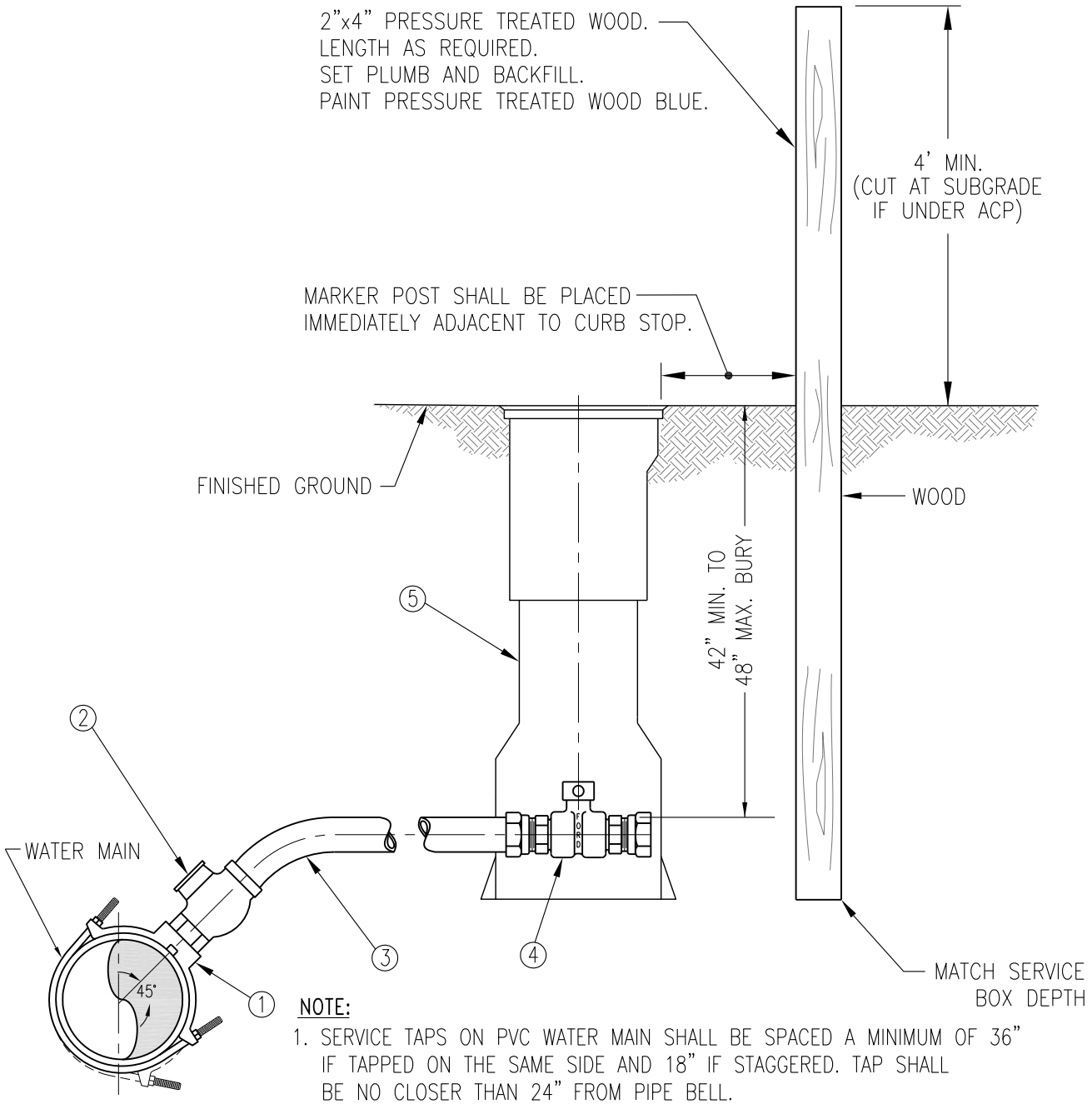

NOTE:

1. SERVICE TAPS ON PVC WATER MAIN SHALL BE SPACED A MINIMUM OF 36" IF TAPPED ON THE SAME SIDE AND 18" IF STAGGERED. TAP SHALL BE NO CLOSER THAN 24" FROM PIPE BELL.

MATERIAL LIST		
ITEM NO.	NO. REQ'D	DESCRIPTION
1	1	SERVICE SADDLE
2	1	CORPORATION STOP
3	1	2" HDPE CTS TUBING, NO JOINTS ALLOWED
4	1	CURB STOP
5	1	SERVICE BOX

Richland Washington

2" STREET SERVICE ASSEMBLY

PUBLIC WORKS ENGINEERING	
APPR. BY: PKR	DATE: 09.13
DRAWN BY: LD	DWG: W2
CAD FILE: 2013_W2_09_2013	

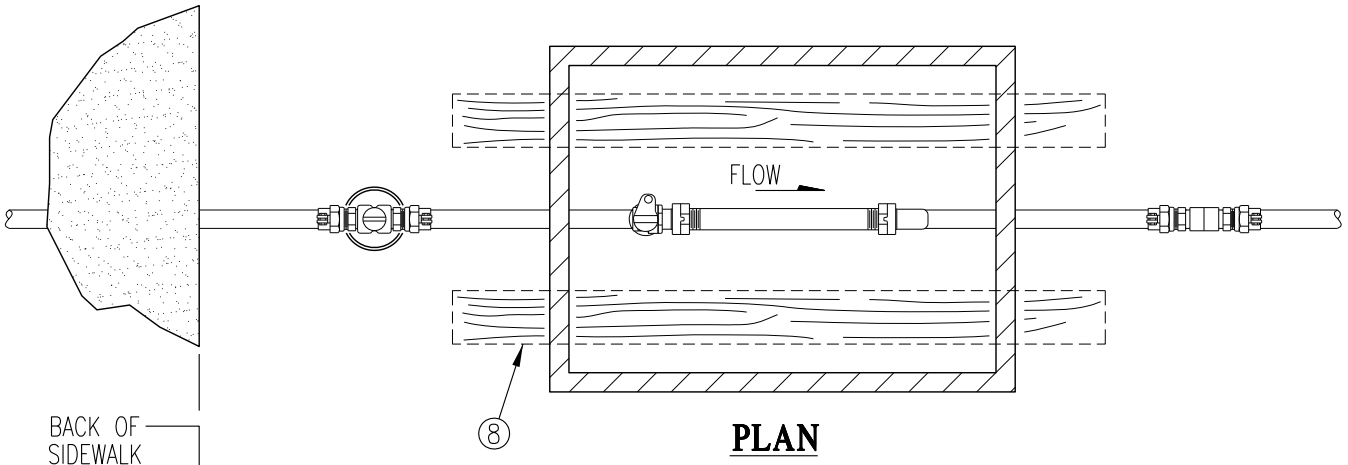

PLAN

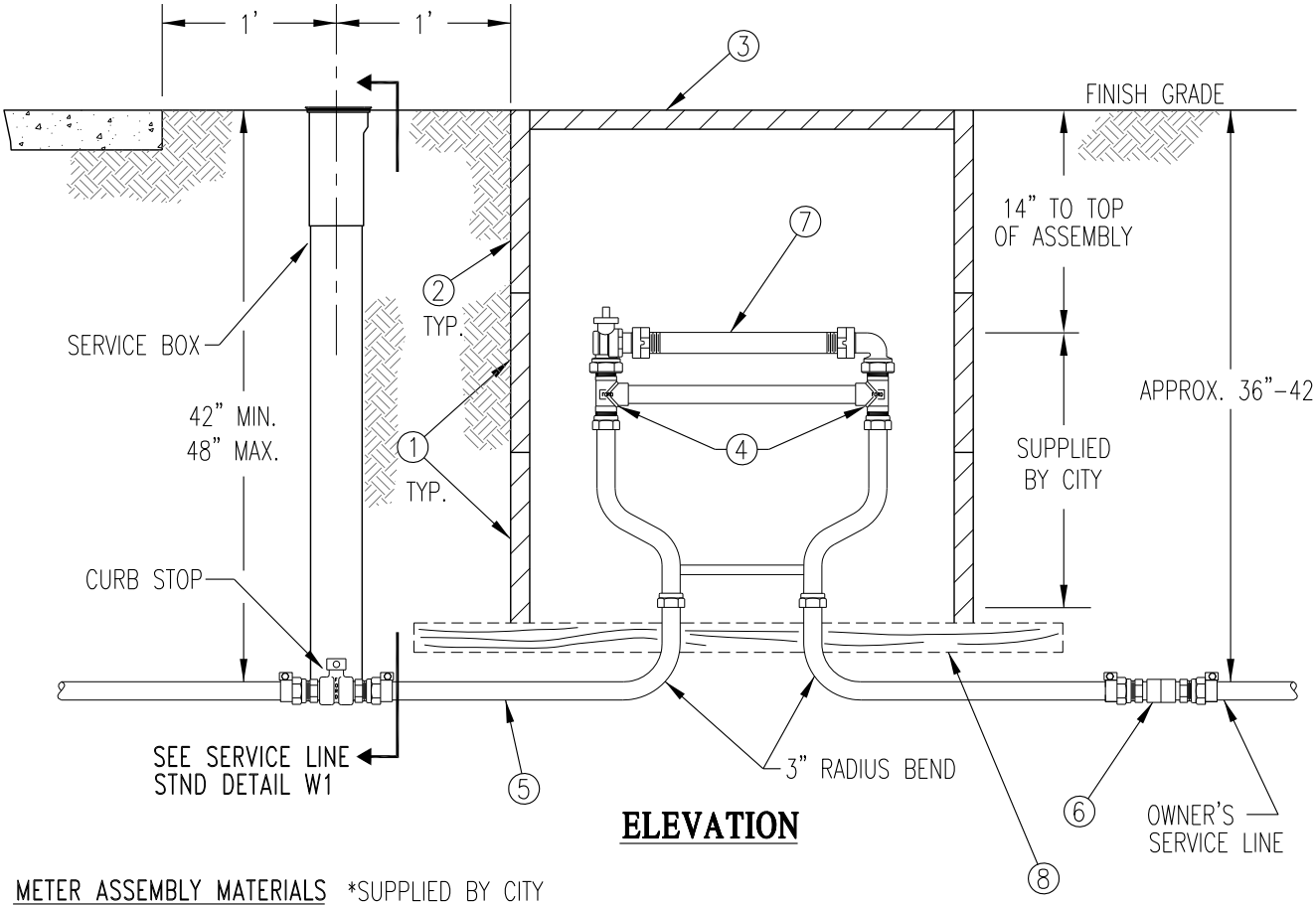

ELEVATION

METER ASSEMBLY MATERIALS *SUPPLIED BY CITY

1. 2 EA. METER BOX, 12", MIDDLE SECTION,
2. 1 EA. METER BOX, 12". TOP SECTION,
3. 1 EA. METER BOX COVER, W/CAST IRON LID, TOP OF METER BOX TO BE LEVEL WITH SURROUNDING SURFACE.

*4. 1" METER SETTER

5. 5' TUBING, COPPER, 1" TYPE K, SOFT-ROLLED.
6. 1" COUPLING

*7. 1" METER JUMPER

8. 2 EA. PRESSURE TREATED 2" X 4" X 4' LONG.

Richland Washington

WATER METER ASSEMBLY FOR 3/4" & 1" METERS

PUBLIC WORKS ENGINEERING	
APPR. BY: PKR	DATE: 09.13
DRAWN BY: LD	DWG: W3
CAD FILE: 2013_W3_09_2013	

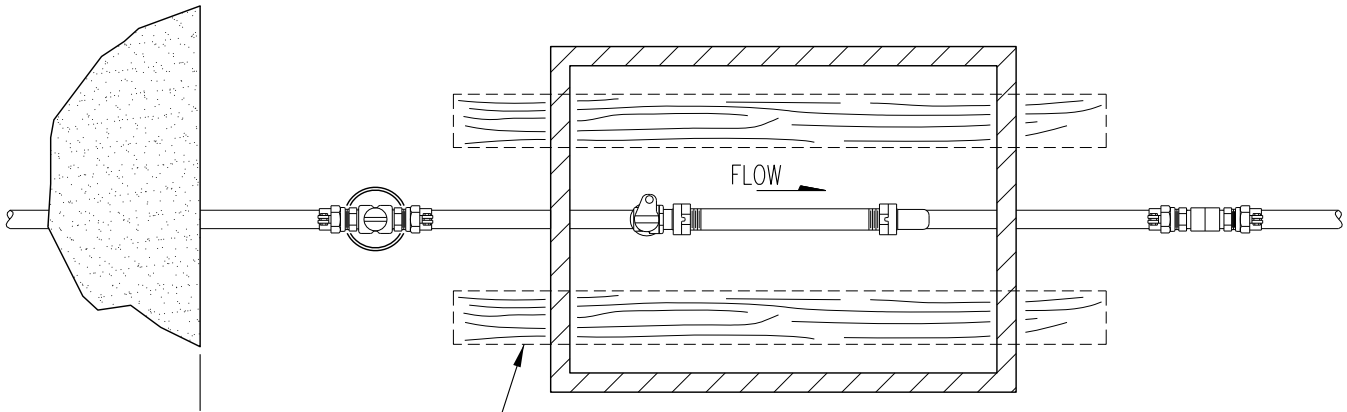

PLAN

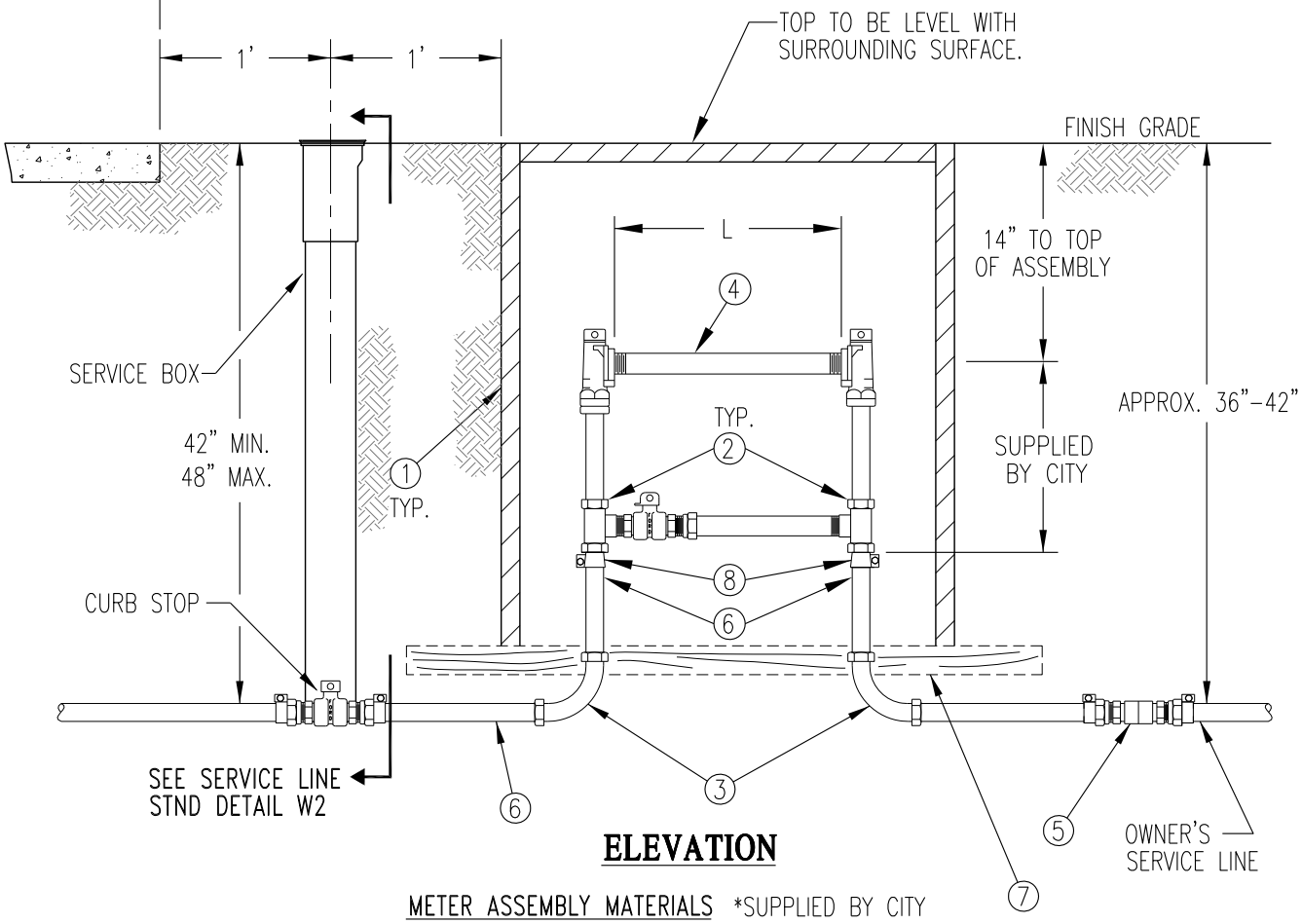

ELEVATION

METER ASSEMBLY MATERIALS *SUPPLIED BY CITY

2" METER

1. METER BOX (CONCRETE) (1-TOP SECTION, 2-MIDDLE SECTIONS & 1-LID).
* 2. 2" METER SETTER (WITH VERTICAL CONNECTION TEES).
3. 2" x 90° COMPRESSION ELL.
* 4. 2" GALV. STEEL METER JUMPER
5. 2" COUPLING.
6. 2" TYPE "L" COPPER TUBING.
7. 2 EA. PRESSURE TREATED 2" x 4" x 4' LONG.
8. COUPLING.

Richland Washington

WATER METER ASSEMBLY FOR 2" METERS

PUBLIC WORKS ENGINEERING	
APPR. BY: PKR	DATE: 09.13
DRAWN BY: LD	DWG: W4
CAD FILE: 2013_W4_09_2013	

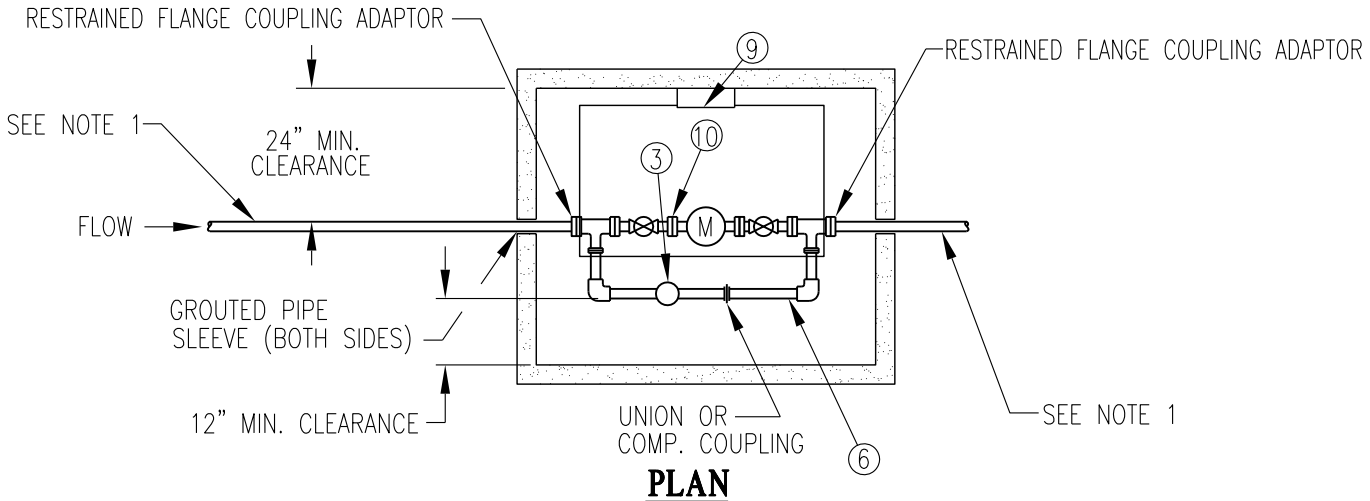

PLAN

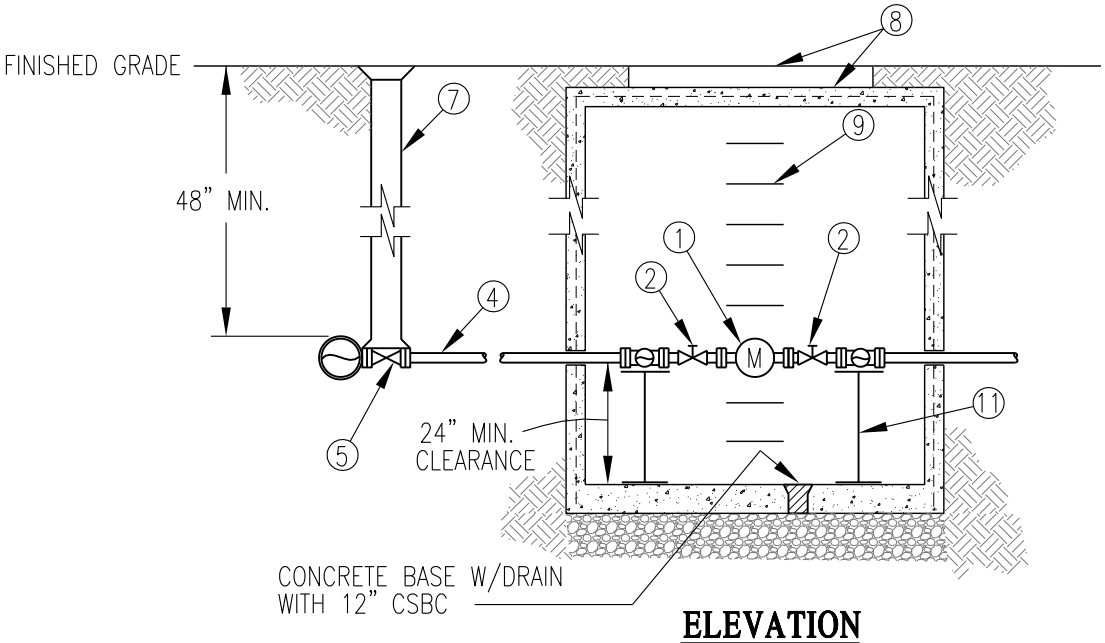

ELEVATION

MATERIALS:

1. WATER METER, SUPPLIED BY CITY (METER LAY LENGTH PROVIDED BY CITY)
2. GATE VALVE, W/HANDWHEEL.
3. BALL VALVE W/LOCKING CAP
4. SERVICE LINE, CLASS 50 DUCTILE IRON.
5. GATE VALVE FL x MJ, W/2" SQUARE OPERATING NUT.
6. 2" TYPE-L COPPER.
7. VALVE BOX
8. REINFORCED PRE-CAST CONCRETE VAULT (SEE CHART FOR VAULT SIZE)
9. VAULT STEPS AT 12" SPACING.
10. DISMANTLING JOINT
11. 4 EA.- ADJUSTABLE STANDS

METER SIZE	VAULT SIZE
3"	7' x 4' x 8' TALL W/ 3' x 3' ALUMINUM ACCESS DOOR
4"	9' x 5' x 7'-2" TALL W/ 36" x 72" ALUMINUM ACCESS DOOR
6"	11'-2" x 5'-8" x 7'-2" TALL W/ 36" x 72" ALUMINUM ACCESS DOOR

NOTES:

1. ALL RESTRAINED JOINT FITTINGS 60' EACH SIDE OF VAULT.

Richland Washington

COMMERCIAL WATER METER

PUBLIC WORKS ENGINEERING	
APPR. BY: PKR	DATE: 03.2012
DRAWN BY: SC NYBY	DWG: W5
CAD FILE: 2012_W5_03_2012	

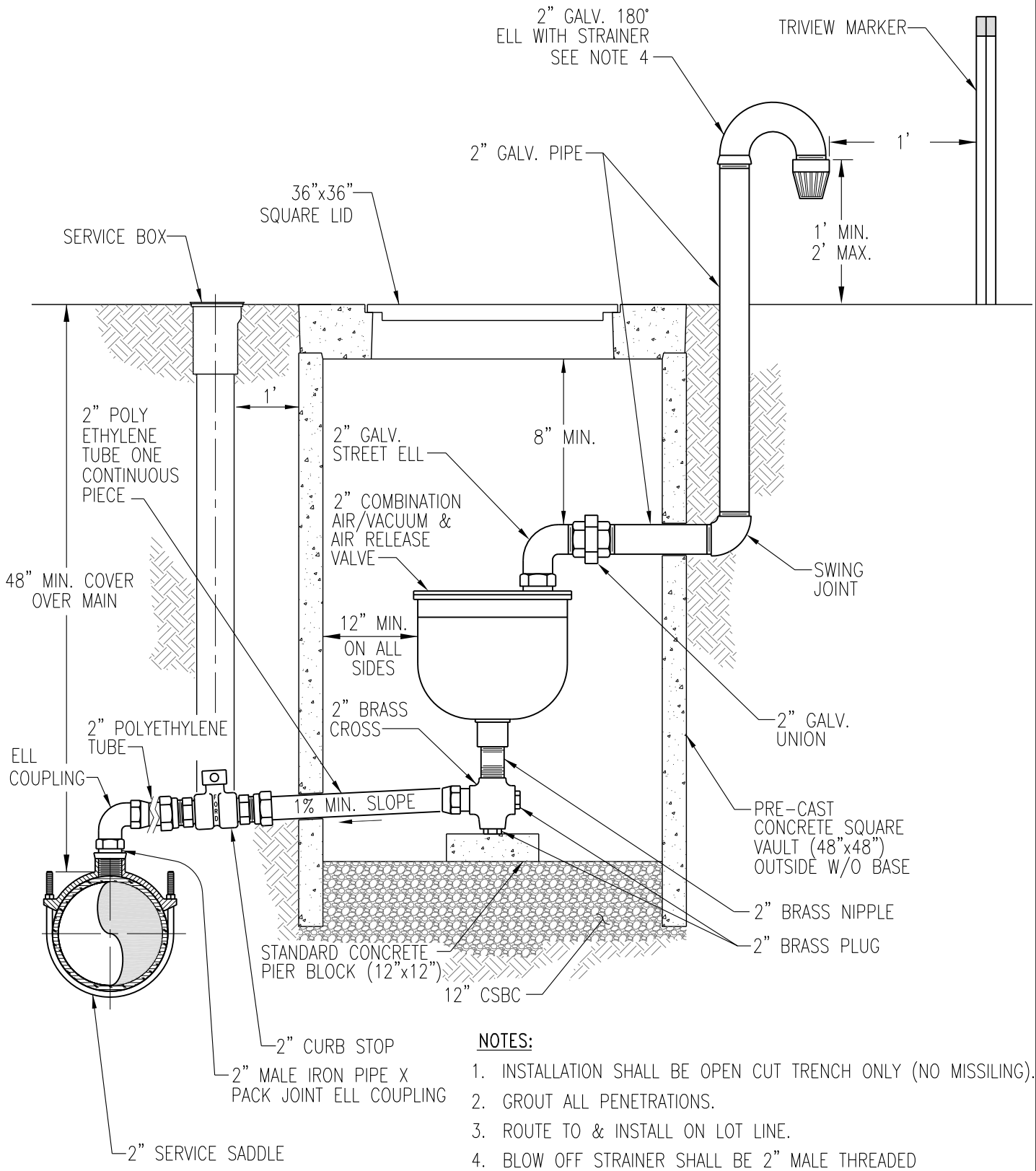

NOTES:

1. INSTALLATION SHALL BE OPEN CUT TRENCH ONLY (NO MISSILING).
2. GROUT ALL PENETRATIONS.
3. ROUTE TO & INSTALL ON LOT LINE.
4. BLOW OFF STRAINER SHALL BE 2" MALE THREADED STRAINER WITH SCREENING.

Richland Washington

2" COMBINATION AIR & VACUUM VALVE ASSEMBLY

PUBLIC WORKS ENGINEERING	
APPR. BY: PKR	DATE: 03.2018
DRAWN BY: EY	DWG: W6
CAD FILE: 2012_W6_03_2018	

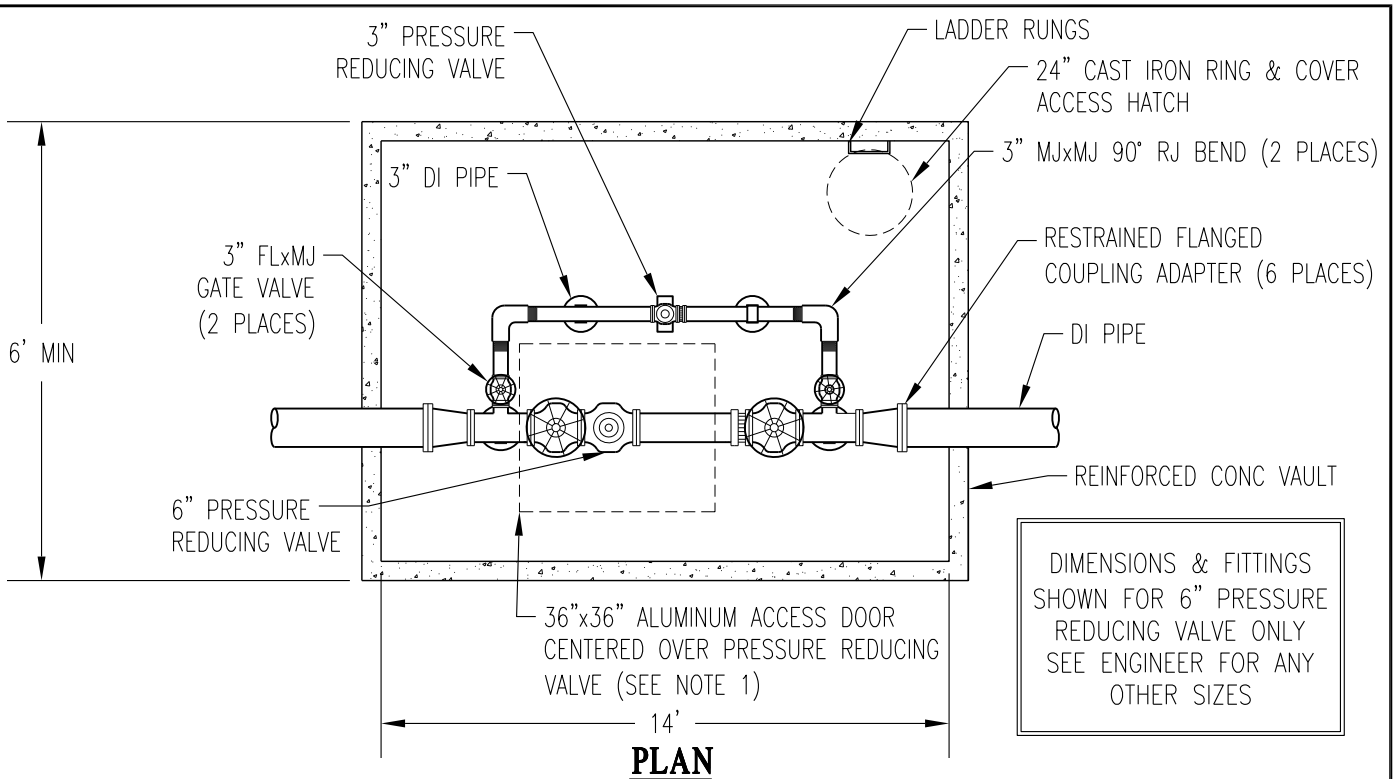

DIMENSIONS & FITTINGS SHOWN FOR 6" PRESSURE REDUCING VALVE ONLY SEE ENGINEER FOR ANY OTHER SIZES

PLAN

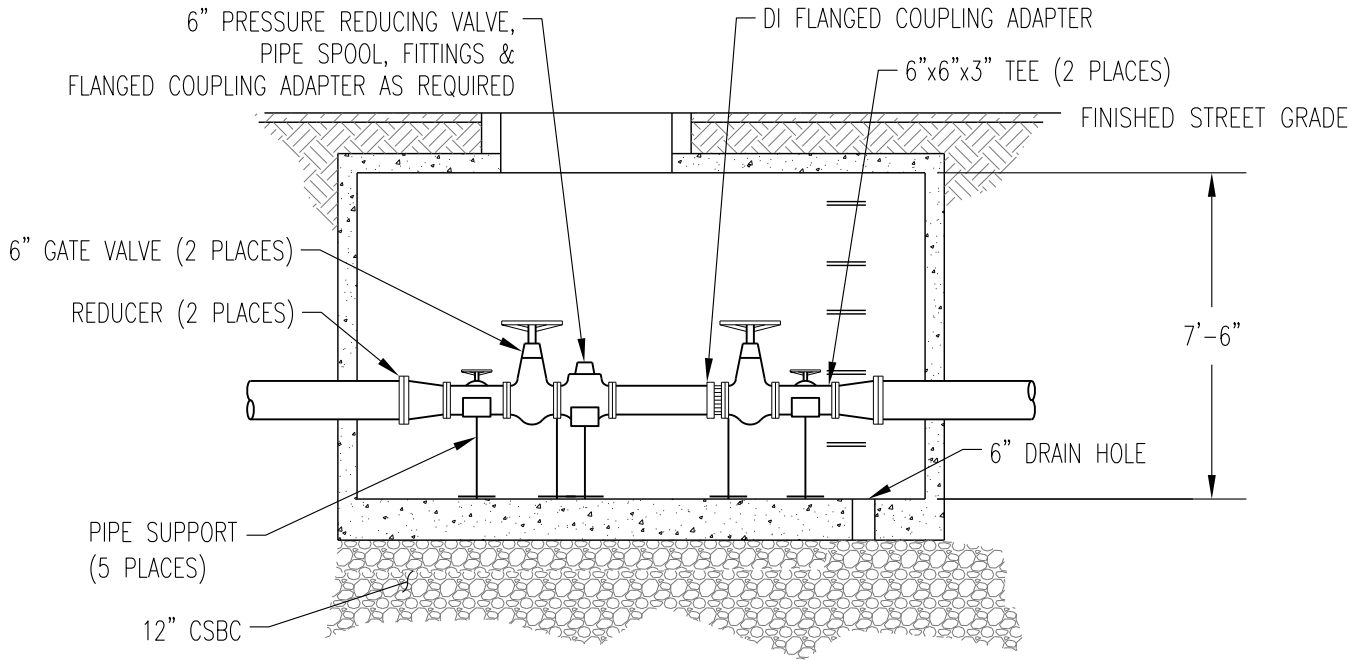

ELEVATION

NOTES:

1. ALUMINUM ACCESS DOOR VAULTS LOCATED IN TRAFFIC AREAS SHALL HAVE TRAFFIC RATED DOORS.
2. ALL RESTRAINED JOINTS EACH SIDE OF VAULT. SEE STANDARD DETAIL W16-B.
3. GROUT ALL PENETRATIONS
4. CITY OF RICHLAND TO INSTALL CONTRACTOR SUPPLIED PRESSURE REDUCING VALVE PARTS. CONTRACTOR TO INSTALL VAULT AND PIPING STRAIGHT THROUGH.

Richland Washington

WATER PRESSURE REDUCING ASSEMBLY

PUBLIC WORKS ENGINEERING	
APPR. BY: PKR	DATE: 03.2018
DRAWN BY: EY	DWG: W8
CAD FILE: 2013_W8_03_2018	

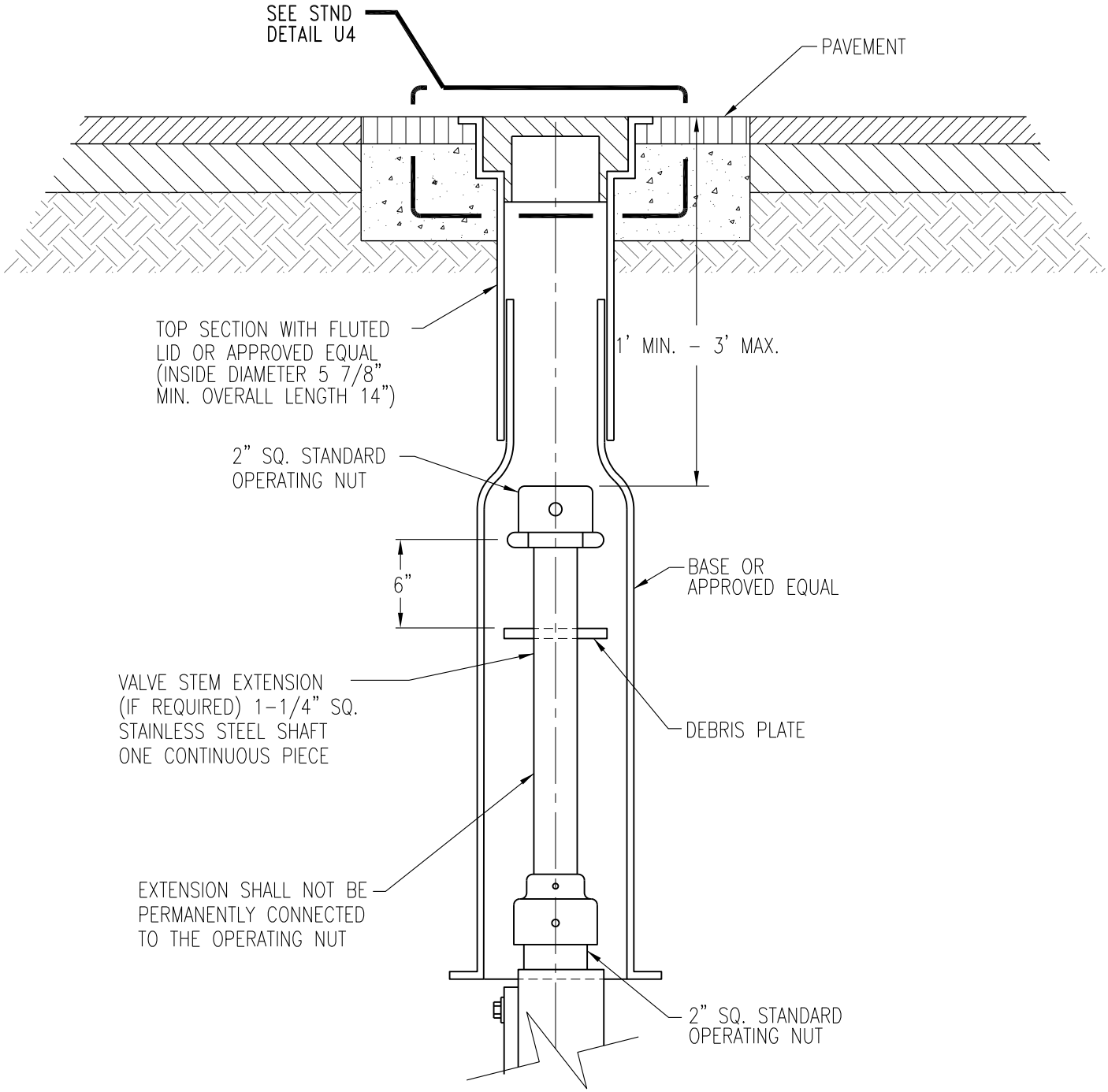

WATER VALVE BOX

PUBLIC WORKS ENGINEERING	
APPR. BY: PKR	DATE: 12.2010
DRAWN BY: SC NYBY	DWG: W9
CAD FILE: 2012_W9_12_2010	

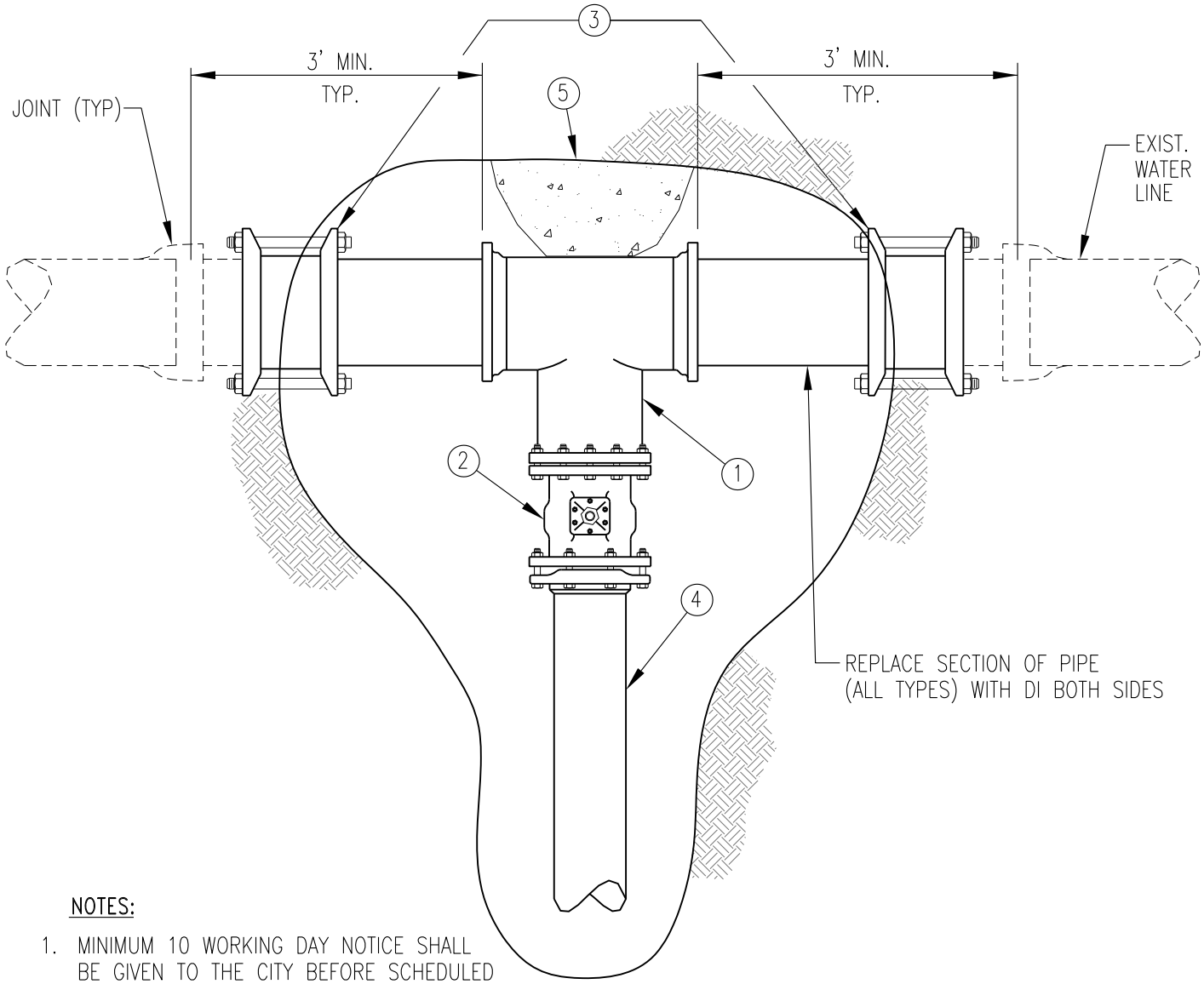

NOTES:

1. MINIMUM 10 WORKING DAY NOTICE SHALL BE GIVEN TO THE CITY BEFORE SCHEDULED CUT-IN TO THE EXISTING WATERLINE. (CONSTRUCTION PLANS MUST BE APPROVED BY CITY ENGINEER PRIOR TO THIS NOTICE).
2. CONTRACTOR IS TO FURNISH ALL MATERIALS AS REQUIRED & HAVE LOCATION EXCAVATED AND SHORED SAFELY WITH MINIMUM OF 2' CLEARANCE OUTSIDE OF ALL NEW FITTINGS AS SHOWN & 18" CLEARANCE UNDER PIPE. PIPE & FITTINGS TO BE "SWABBED & BAGGED" 24 HOURS BEFORE CUT-IN.
3. AFTER THE CUT-IN BY CITY, CONTRACTOR SHALL INSTALL THRUST BLOCK & VALVE BOX, BACKFILL EXCAVATED AREA & PROVIDE APPROPRIATE STREET PATCH IF NECESSARY.

MATERIALS BY CONTRACTOR

1. MJxMJxFL TEE
2. *MJxFL VALVE W/ STANDARD CONC PIER BLOCK
3. TRANSITION COUPLINGS
4. NEW WATER LINE
5. THRUST BLOCK

*BUTTERFLY VALVE FOR 10" AND LARGER, NOT SHOWN FOR CLARITY

Richland Washington

CUT-IN TO EXISTING WATER LINE

PUBLIC WORKS ENGINEERING	
APPR. BY: PKR	DATE: 03.2018
DRAWN BY: EY	DWG: W10
CAD FILE: 2014_W10_03_2018	

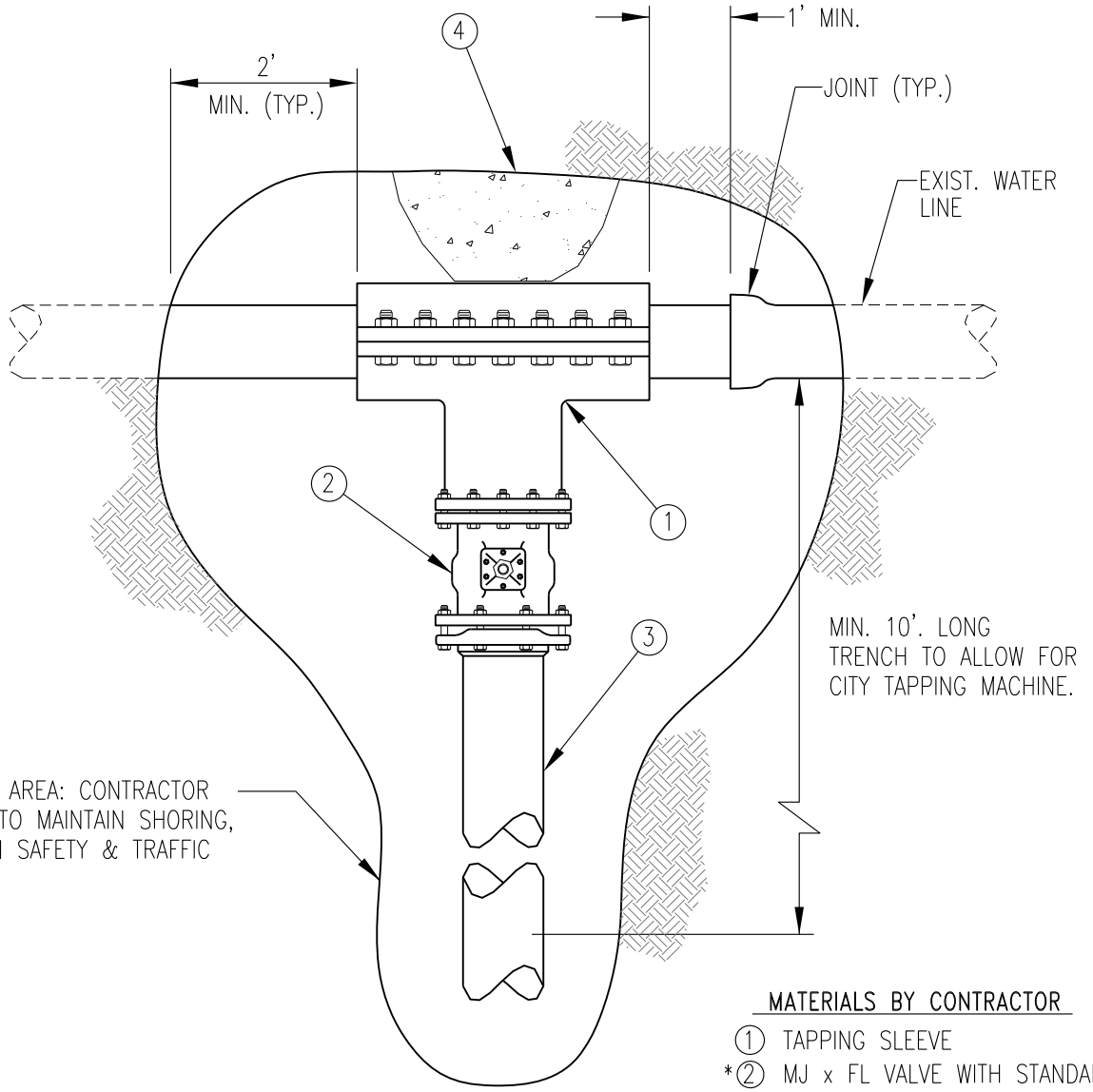

MATERIALS BY CONTRACTOR

1. TAPPING SLEEVE
*2. MJ x FL VALVE WITH STANDARD CONCRETE PIER BLOCK
3. NEW WATER LINE EXTENSION
4. THRUST BLOCK

NOTES:

1. MINIMUM 10 WORKING DAY NOTICE SHALL BE GIVEN TO THE CITY BEFORE SCHEDULED TAP TO THE EXISTING WATER LINE. (CONSTRUCTION PLANS MUST BE APPROVED BY CITY ENGINEER PRIOR TO THIS NOTICE).

2. CONTRACTOR IS TO FURNISH ALL MATERIALS AS REQUIRED AND HAVE LOCATION EXCAVATED WITH MINIMUM OF 2' CLEARANCE OUTSIDE OF ALL NEW FITTINGS AS SHOWN & 18" CLEARANCE UNDER PIPE.

3. AFTER THE TAP BY CITY, CONTRACTOR SHALL INSTALL THRUST BLOCK & VALVE BOX, BACKFILL EXCAVATED AREA & PROVIDE APPROPRIATE STREET PATCH IF NECESSARY.

* TAPPING VALVES ARE REQUIRED ON 12 INCH DIAMETER & LARGER & ALL SIZE ON SIZE TAPS.

Richland Washington

TAP ON EXISTING WATER LINE

PUBLIC WORKS ENGINEERING	
APPR. BY: PKR	DATE: 12.2010
DRAWN BY: SC NYBY	DWG: W11
CAD FILE: 2012_W11_12_2010	

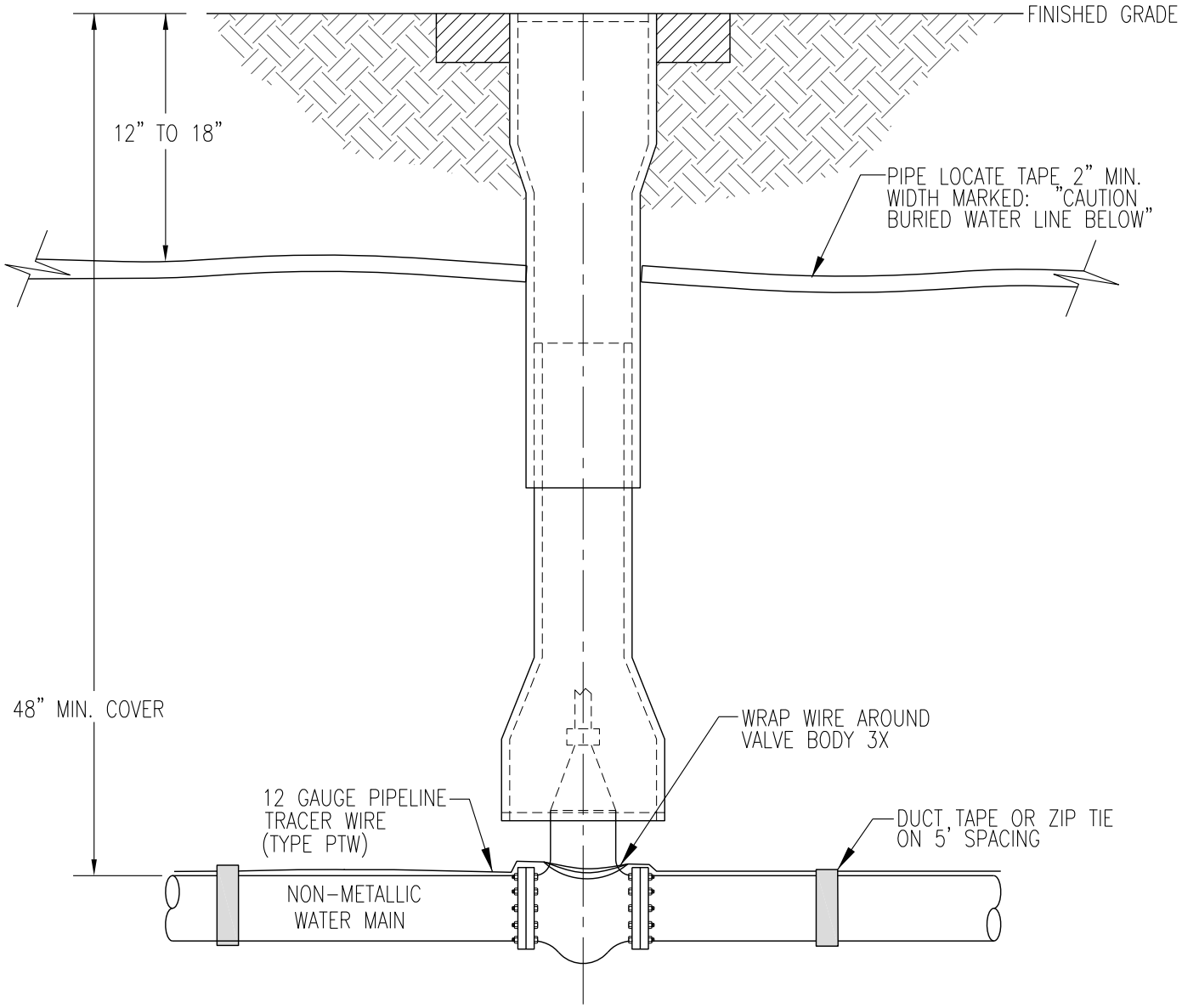

NOTES:

1. PRIOR TO PAVING, CONTRACTOR MUST SCHEDULE WITH CITY TO TEST WIRE FOR ELECTRICAL CONTINUITY.
2. INSTALL ELECTRICAL WATER TIGHT CONNECTORS (GEL PACKS) THAT SNAP TOGETHER AT ALL SPLICES.

Richland Washington	TRACER WIRE INSTALLATION (NON-METALLIC WATER MAINS)	PUBLIC WORKS ENGINEERING
		APPR. BY: PKR — DATE: 03.2018
		DRAWN BY: EY — DWG: W12
		CAD FILE: 2012_W12_03_2018

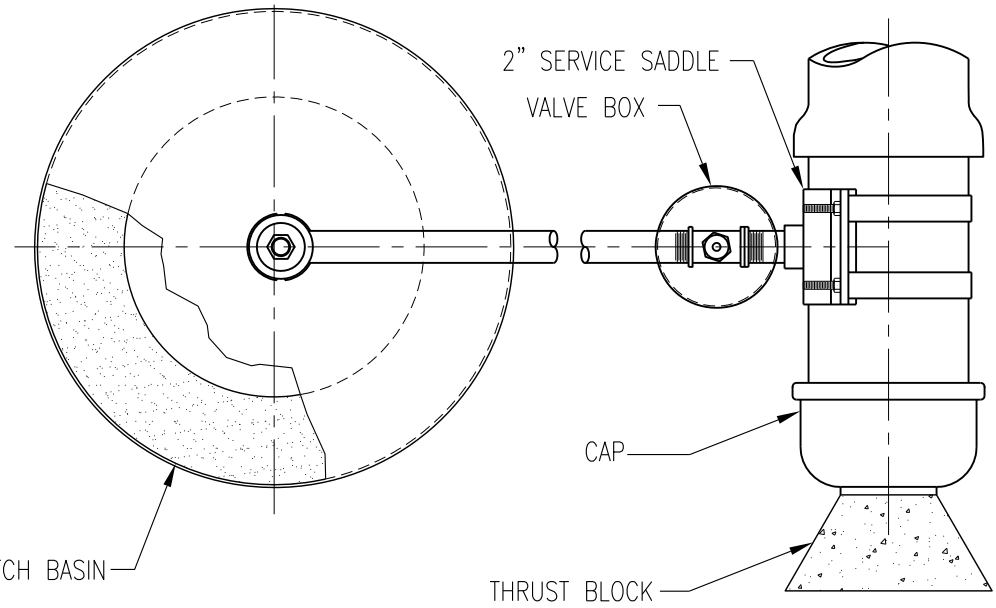

PLAN

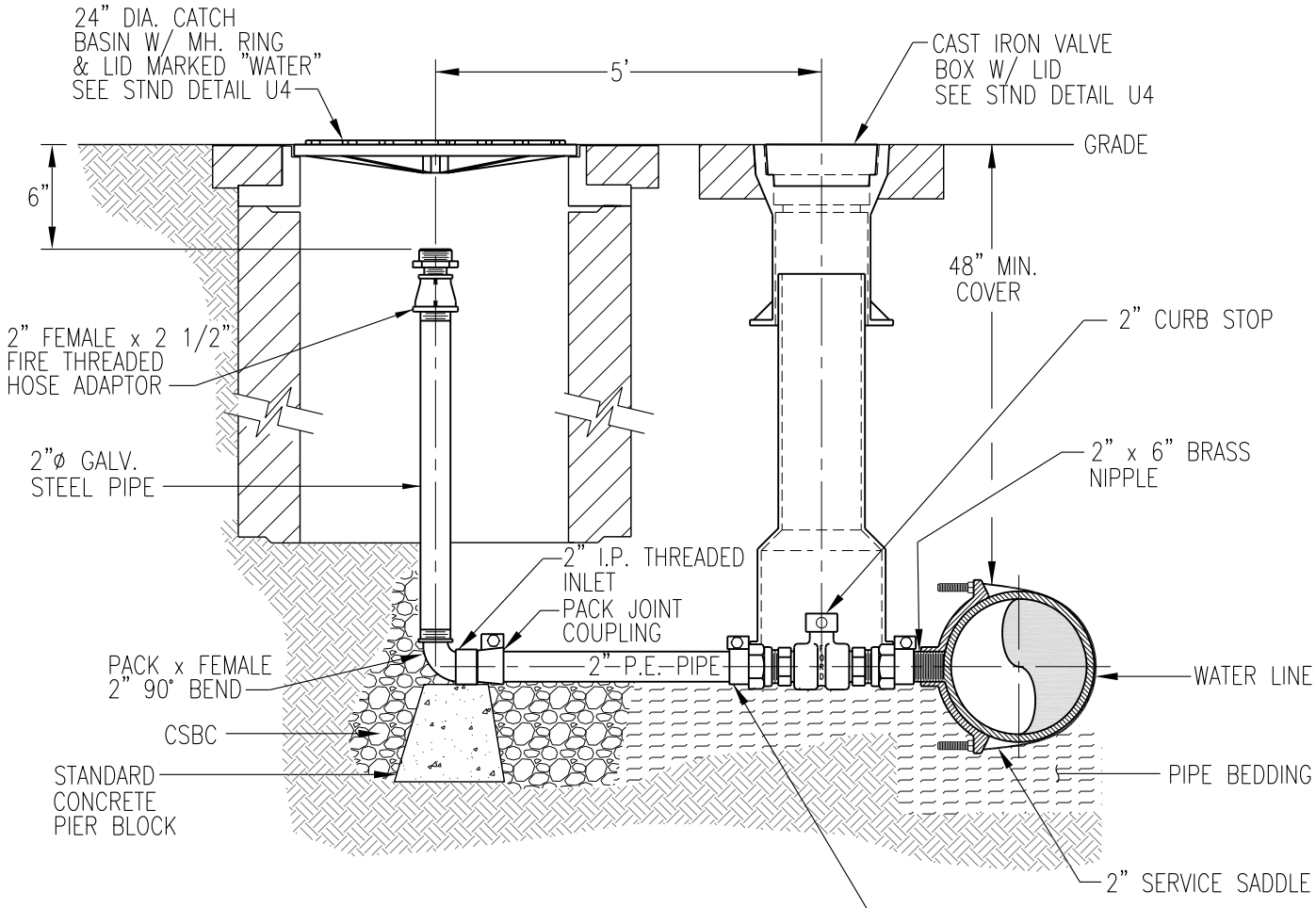

ELEVATION

Richland Washington

BLOW-OFF ASSEMBLY

PUBLIC WORKS ENGINEERING	
APPR. BY: PKR	DATE: 03.2012
DRAWN BY: SC NYBY	DWG: W13
CAD FILE: 2012_W13_03_2012	

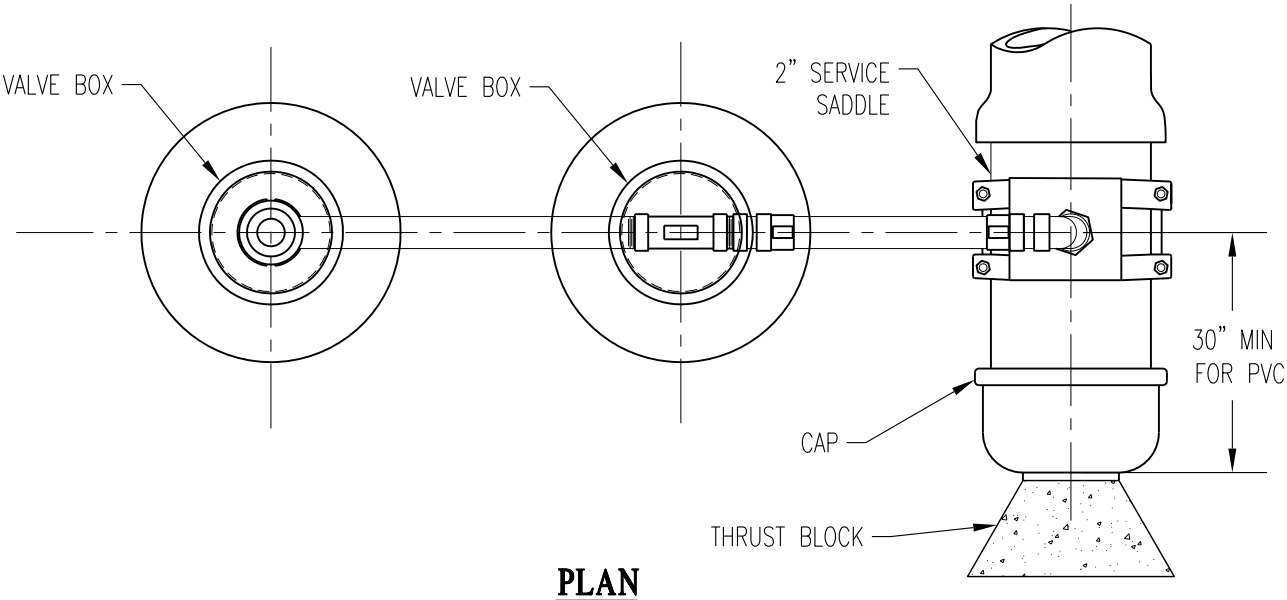

PLAN

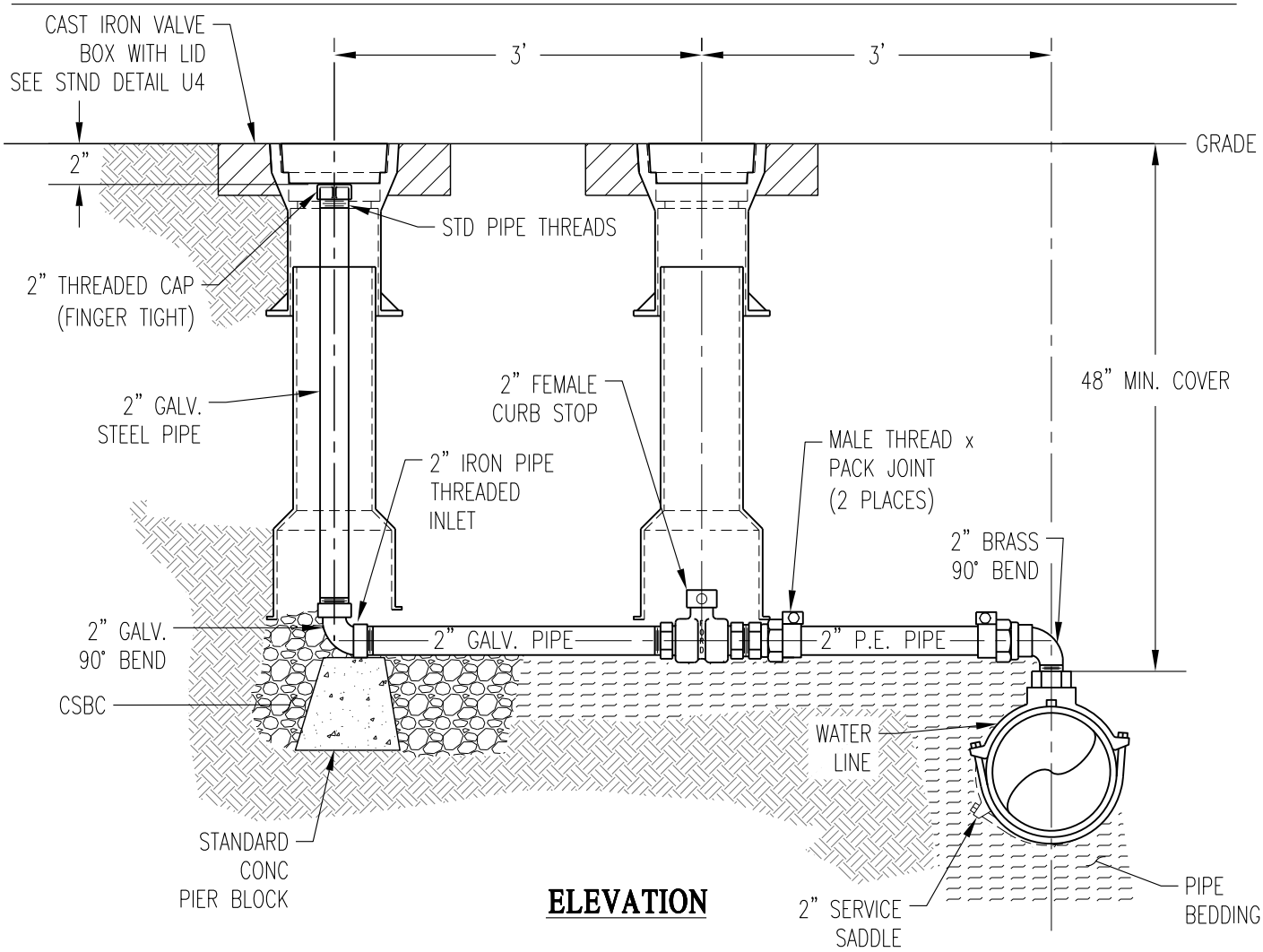

ELEVATION

TEMPORARY BLOW-OFF ASSEMBLY

PUBLIC WORKS ENGINEERING	
APPR. BY: PKR	DATE: 11.15
DRAWN BY: LD	DWG: W13A
CAD FILE: 2012_W13A_11_2015	

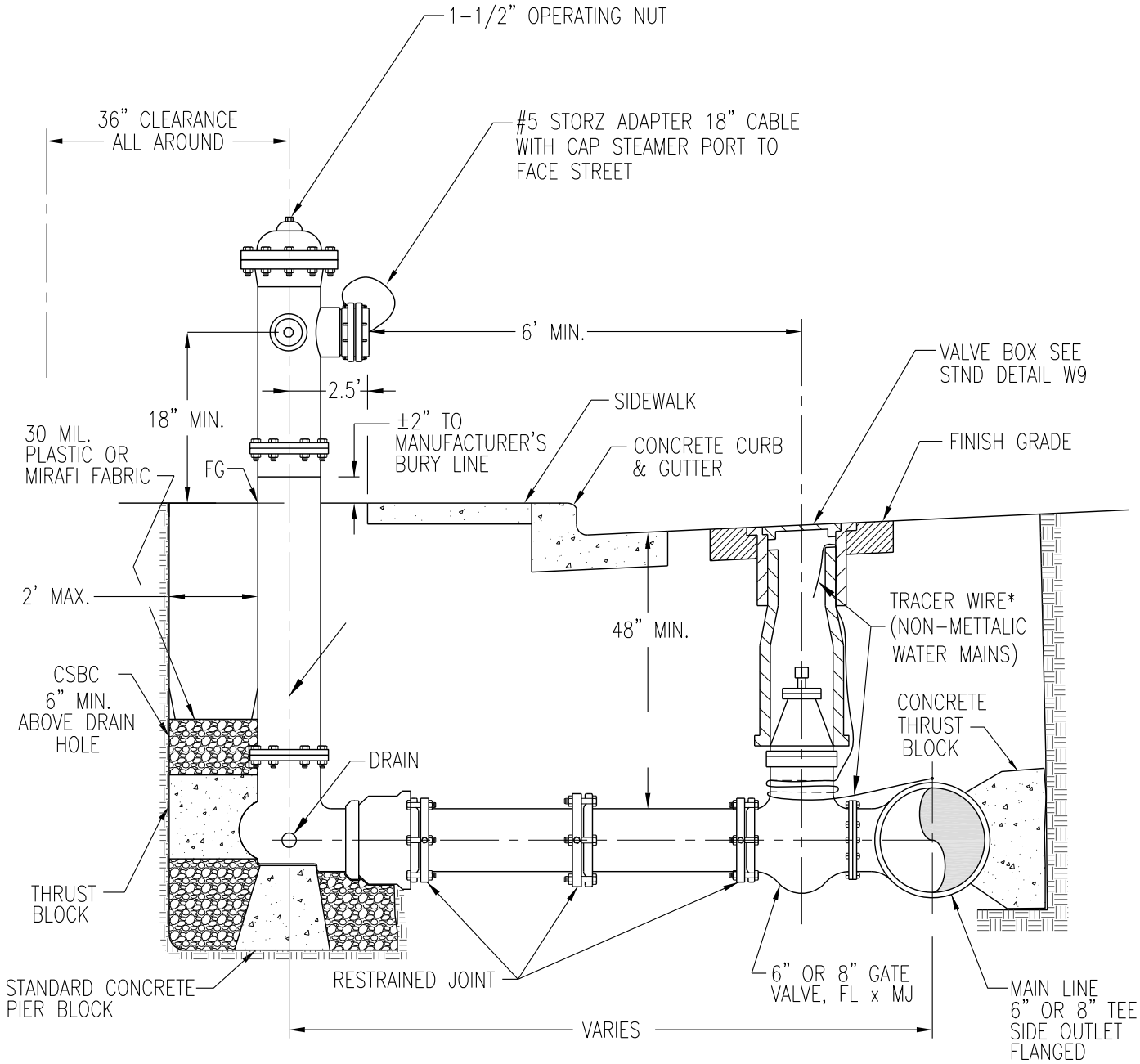

NOTES:

1. SEE STANDARD DETAIL W15 FOR BOLLARD POST REQUIREMENTS. CONTACT ENGINEER FOR PLACEMENT LOCATION. 5'x10' CONCRETE SIDEWALK TO BE PLACED AROUND HYDRANT AS DIRECTED BY ENGINEER.
2. IF FIRE HYDRANT IS MORE THAN 50' AWAY FROM THE WATER MAIN, INSTALL 8" LINE & VALVE WITH 8" X 6" REDUCER AT HYDRANT.
3. LOCATE FIRE HYDRANT 2' BEHIND CURB WHERE NO SIDEWALK IS PRESENT.
4. NO EXTENSIONS ALLOWED ON NEW INSTALLATIONS.
5. SEE STANDARD DETAIL W12 FOR TRACING WIRE INSTALLATION ON PVC MAIN LINES.

* STRIP INSULATION FROM LAST 12" OF THE WIRE AND BEND OVER LIP OF BOTTOM BOX.

Richland Washington

FIRE HYDRANT DETAIL

PUBLIC WORKS ENGINEERING	
APPR. BY: PKR	DATE: 03.2020
DRAWN BY: EY	DWG: W14
CAD FILE: 2014_W14_03_2020	

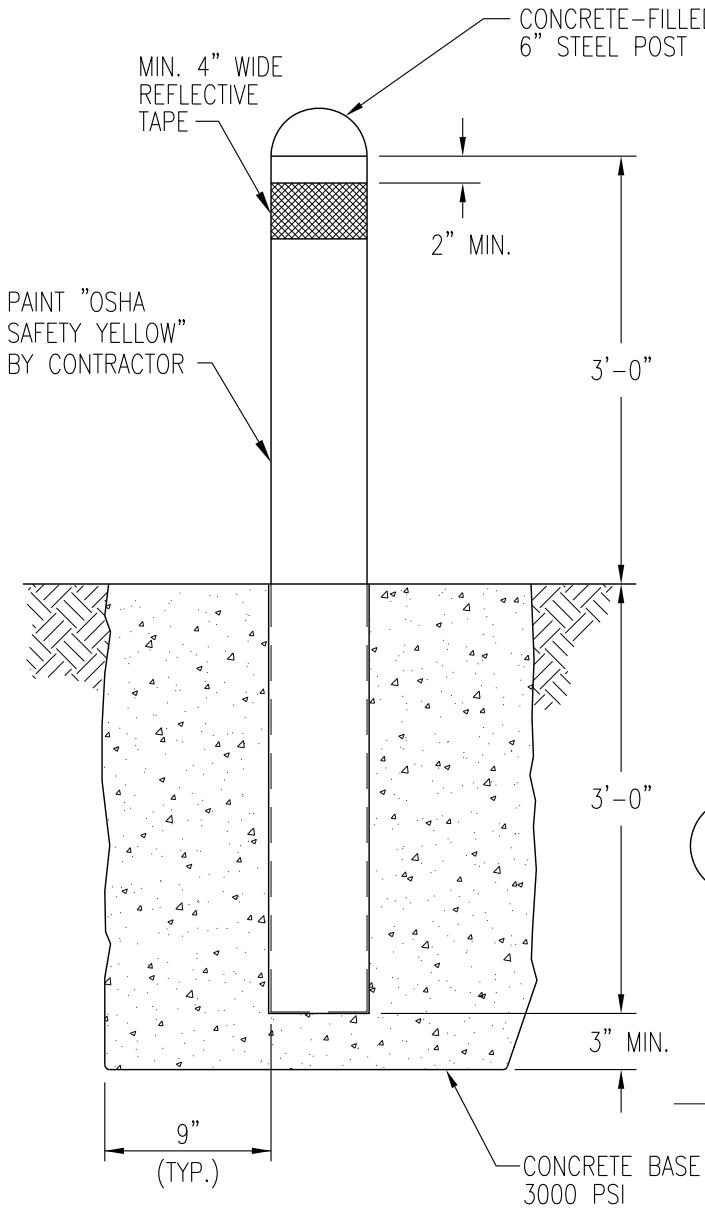

SECTION A-A

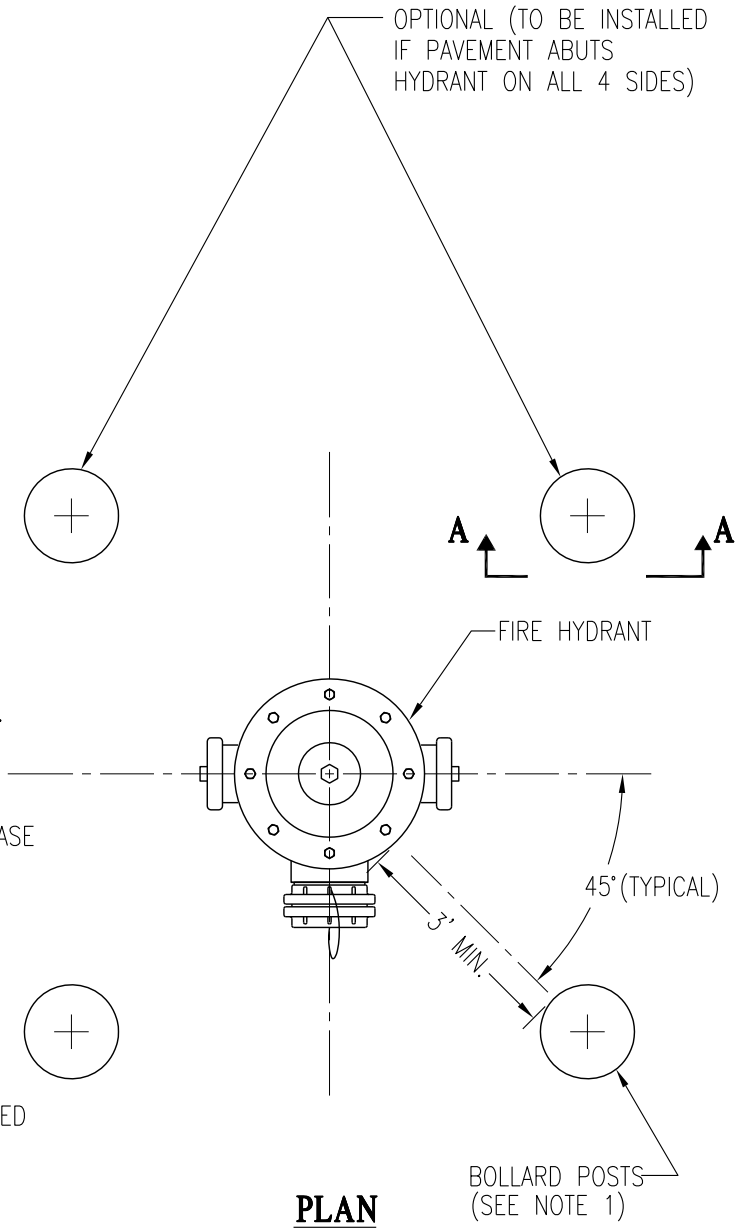

PLAN

NOTE:

1. WHERE CONCRETE CURBING IS NOT INSTALLED, BOLLARD POSTS (2 EA. MINIMUM) SHALL BE INSTALLED ON SIDE FACING PAVED SURFACE.

Richland Washington

BOLLARD POSTS

PUBLIC WORKS ENGINEERING	
APPR. BY: PKR	DATE: 12.2010
DRAWN BY: SC NYBY	DWG: W15
CAD FILE: 2012_W15_12_2010	

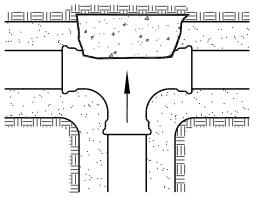

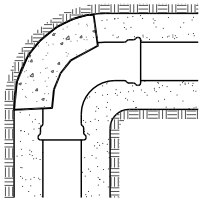

VERTICAL THRUST BLOCKS

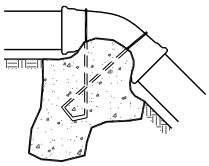

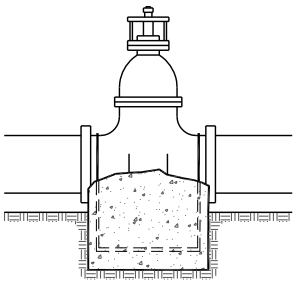

	HORIZONTAL THRUST BLOCKS				VERTICAL THRUST BLOCKS		
	MINIMUM BEARING AREA IN SQUARE FEET				MINIMUM VOLUME IN CUBIC YARDS		
Pipe Size in Inches	Tees, Wyes & Dead Ends	90° Bend	45° Bend	11 1/4° 22 1/2° Bend	45° Vertical Bend	11-1/4° 22-1/2° Vert. Bend	Restrained Valve
4 & Smaller	1.41	2.00	1.08	0.56	0.56	0.29	0.72
6	3.18	4.50	2.43	1.25	1.25	0.63	1.62
8	5.66	8.00	4.34	2.21	2.21	1.13	2.90
10	8.84	12.50	6.77	3.45	3.45	1.76	4.52
12	12.72	18.00	9.74	4.97	4.98	2.54	6.50
14	17.33	24.50	13.26	6.75	*	*	8.85
16	22.62	32.00	17.31	8.82	*	*	11.55
18	28.64	40.50	21.92	11.18	*	*	14.63
20	35.34	50.00	27.05	13.79	*	*	18.06
24	50.90	72.00	38.96	19.86	*	*	26.00

NOTES:

1. CONCRETE THRUST BLOCKING TO BE POURED AGAINST UNDISTURBED EARTH.
2. KEEP CONCRETE CLEAR OF JOINT AND ACCESSORIES.
3. ABOVE BEARING AREA & VOLUMES ARE CALCULATED AT A SOIL BEARING CAPACITY OF 2000 PSF & A TEST PRESSURE OF 225 PSI.
4. 6 MIL. PLASTIC TO BE PLACED BETWEEN THRUST BLOCK AND FITTINGS.
5. VALVES SHALL HAVE CONCRETE RESTRAINT BLOCKS AS SPECIFIED ABOVE UNLESS THE VALVE IS FLANGED TO A TEE, CROSS OR SIMILAR FITTING OR ANOTHER METHOD OF RESTRAINT IS PROVIDED.

*NO VERTICAL BENDS WITHOUT SPECIFIC APPROVAL BY THE ENGINEER.

Richland Washington

THRUST BLOCKING DETAILS

PUBLIC WORKS ENGINEERING	
APPR. BY: PKR	DATE: 03.2018
DRAWN BY: EY	DWG: W16-A
CAD FILE: 2012_W16_03_2018	

RESTRAINED PIPE LENGTH (FEET)

TEE BRANCH AND LENGTH EACH SIDE OF BEND

Pipe Size in Inches		TYPE OR FITTINGS					
		Tee Branch	90° Bend	45° Bend	22 1/2° Bend	11 1/4° Bend	Dead End Valve Or Plug & FH
Static Test Pressure (PSI)		150	150	150	150	150	150
6 INCH	PVC	60	27	11	5	3	65
	D.I.P.	46	23	10	5	2	49
8 INCH	PVC	81	34	14	7	3	84
	D.I.P.	61	30	12	6	3	63
12 INCH	PVC	118	48	20	10	5	120
	D.I.P.	88	42	18	8	4	90
16 INCH	D.I.P.	113	54	22	11	5	THRUST BLOCK
20 INCH	D.I.P.	137	64	26	13	6	
24 INCH	D.I.P.	161	74	30	15	7	
30 INCH	D.I.P.	149	87	36	17	9	
36 INCH	D.I.P.	223	100	41	20	10	

CALCULATIONS ARE BASED ON INSTALLATION IN POORLY GRADED SANDS, GRAVEL AND GRAVEL-SAND MIXTURES (GM&SM). TYPE 3 TRENCH - PIPE BEDDED IN SELECT NATIVE, OR IMPORTED EARTH BEDDING, TO A DEPTH OF 6 INCHES OVER THE PIPE, SEE STANDARD DETAIL U2, A MINIMUM 3 FEET OF COMPACTED PIPE BURY AT THE TIME OF THE PRESSURE TEST AND A SAFETY FACTOR OF 1.5:1 TO ALLOW FOR SITE CONDITION VARIABLES.

NOTES:

1. FOR DESIGN FORMULAS, CALCULATIONS AND ADDITIONAL INFORMATION, THE TABLE IS BASED ON THE RESTRANT CALCULATIONS FOUND AT HTTPS://EBAA.COM/CALCULATOR/ THE RESTRAINED PIPE LENGTH APPLIES TO CONDITIONS WHERE A CONCRETE THRUST BLOCK IS NOT USED.

2. IF POLYETHYLENE WRAPPED D.I.P. IS SPECIFIED, INDEPENDENT CALCULATIONS ARE REQUIRED. DO NOT USE THE ABOVE TABLE.

3. EVERY JOINT WITHIN THE DESIGNATED RESTRAINT LENGTH MUST BE RESTRAINED, IF THE REQUIRED RESTRAINT LENGTH IS SHORTER THAN A SINGLE SECTION OF PIPE BEING USED, ONLY THE FITTING CONNECTION REQUIRES RESTRAINT.

4. THRUST BLOCKS ARE REQUIRED FOR ALL CONNECTIONS TO AC PIPE AND WHEN AN AC PIPE CONNECTION IS LOCATED ANYWHERE WITHIN THE DESIGNATED RESTRAINT LENGTH.

5. THRUST BLOCKS ARE REQUIRED IF THE DESIGNATED RESTRAINT LENGTH CANNOT BE OBTAINED, SPECIAL ATTENTION NEEDS TO BE GIVEN TO DEAD END STUBS AND FIRE HYDRANT INSTALLATIONS. IF THE LENGTH OF THE FEEDER PIPE, FROM THE MAIN LINE TEE TO THE END CAP, OR HYDRANT, IS LESS THAN THE DESIGNATED DEAD END RESTRAINT LENGTH, THRUST BLOCKS ARE REQUIRED AT BOTH THE TEE AND AT THE END CAP, OR HYDRANT. WHEN THE SPECIFIED CONDITIONS ALLOW THE USE OF MECHANICAL RESTRAINTS, THE RESTRAINT LENGTH REQUIREMENTS FOR BOTH THE TEE AND THE END CAP, OR HYDRANT MUST BE MET.

6. APPROVED TYPES OF RESTRAINED PIPE SHALL BE: SEE MATERIAL LIST.

Richland Washington

MECHANICAL RESTRAINT

PUBLIC WORKS ENGINEERING	
APPR. BY: PKR	DATE: 08.2020
DRAWN BY: EY	DWG: W16-B
CAD FILE: 2017_W16B_03_2018	

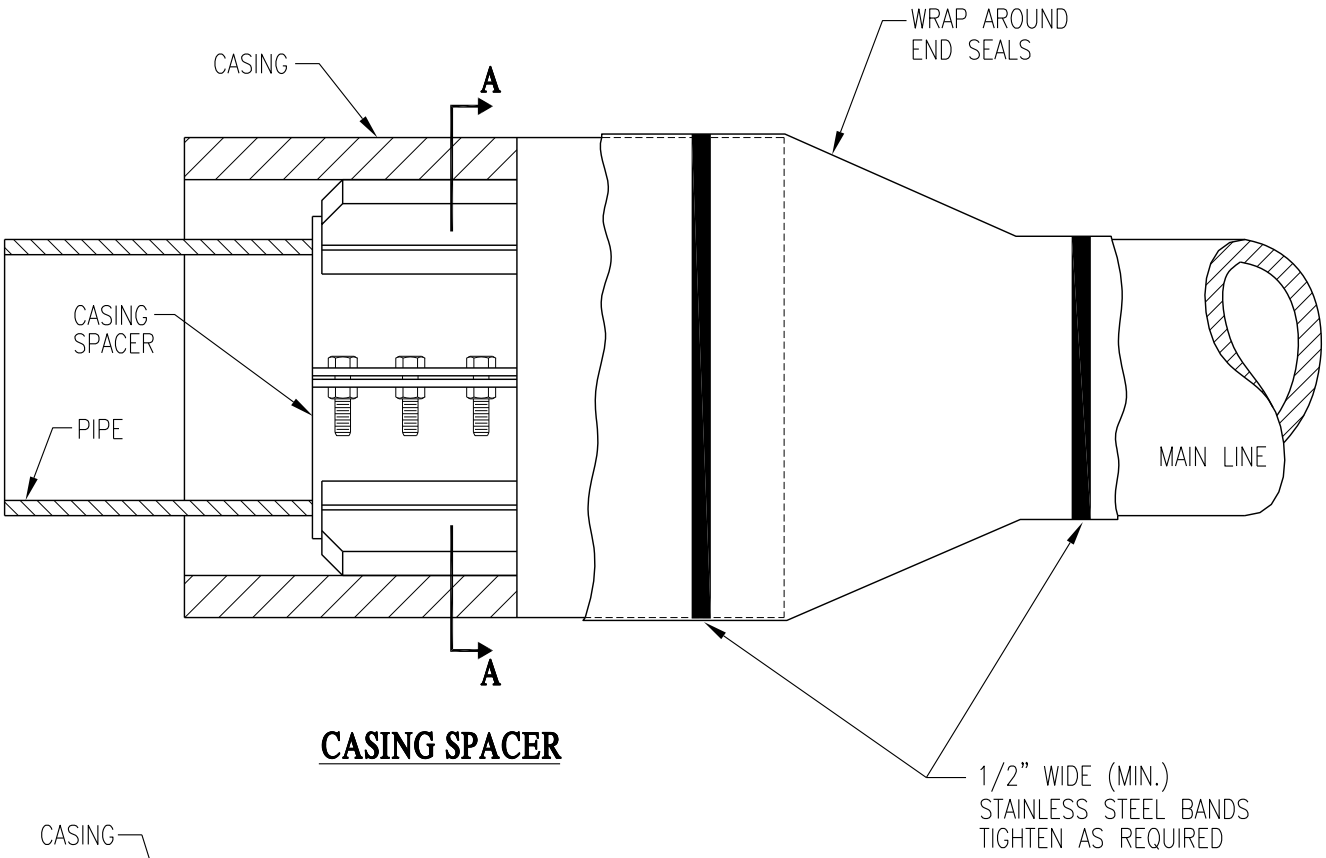

CASING SPACER

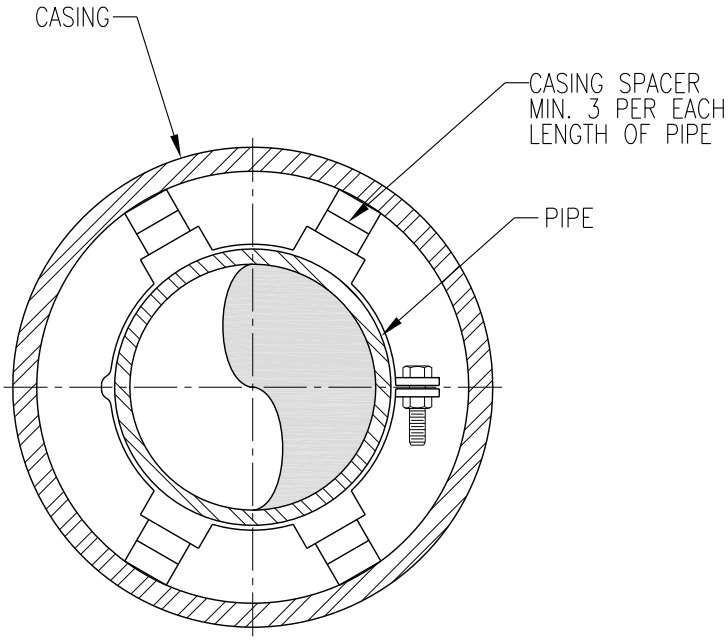

SECTION A-A

NOTES:

1. CASING SPACERS SHALL BE MANUFACTURED GALVANIZED OR STAINLESS STEEL, SIZED FOR THE TYPE OF PIPE & CASING SIZE PER THE MANUFACTURERS RECOMMENDATION.
2. CASING TO BE SIZED TO PROVIDE MINIMUM 2" CLEARANCE FOR THE TYPE OF JOINT APPROVED BY THE CITY ENGINEER.
3. PIPE JOINTS WITHIN CASING TO BE RESTRAINED JOINT AS APPROVED BY THE CITY ENGINEER.
4. FOR PIPES 12" & SMALLER, 2 SPACERS PER JOINT OF 13' SEWER, 4 SPACERS PER JOINT OF 18' OR 20' WATER.
5. MINIMUM 3/8" THICK STEEL CASINGS MAY BE REQUIRED BY THE RAILROAD OR IRRIGATION UTILITY.

Richland Washington

CASING SPACER

PUBLIC WORKS ENGINEERING	
APPR. BY: PKR	DATE: 12.2010
DRAWN BY: SC NYBY	DWG: W17
CAD FILE: 2012_W17_12_2010	

BUILDER IS RESPONSIBLE FOR THE WATER SERVICE IF DAMAGED - A $300.00 MINIMUM FEE WILL BE CHARGED. * ADDITIONAL FEES MAY BE CHARGED FOR EXTENSIVE DAMAGE OVER $300.00.

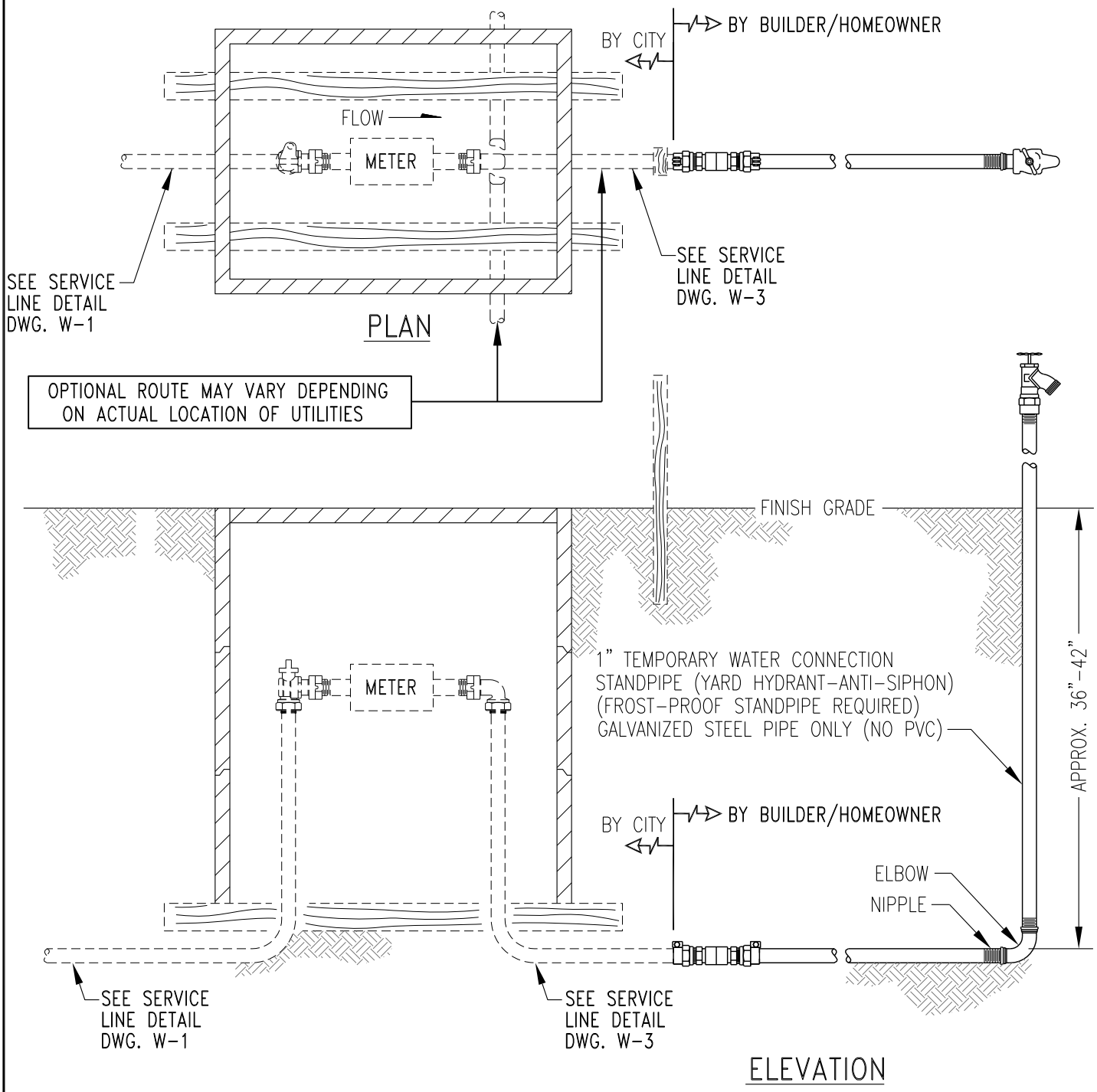

Richland Washington	WATER SERVICE CONNECTION FOR NEW RESIDENTIAL LOT	PUBLIC WORKS ENGINEERING
		APPR. BY: PKR — DATE: 03.2012
		DRAWN BY: SC NYBY — DWG: W18
		CAD FILE: 2012_W18_03_2012

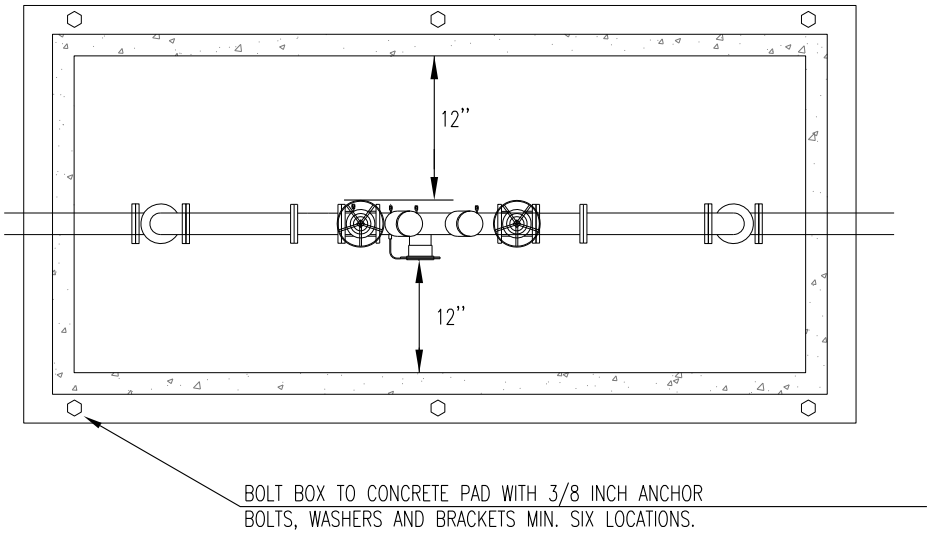

TOP VIEW

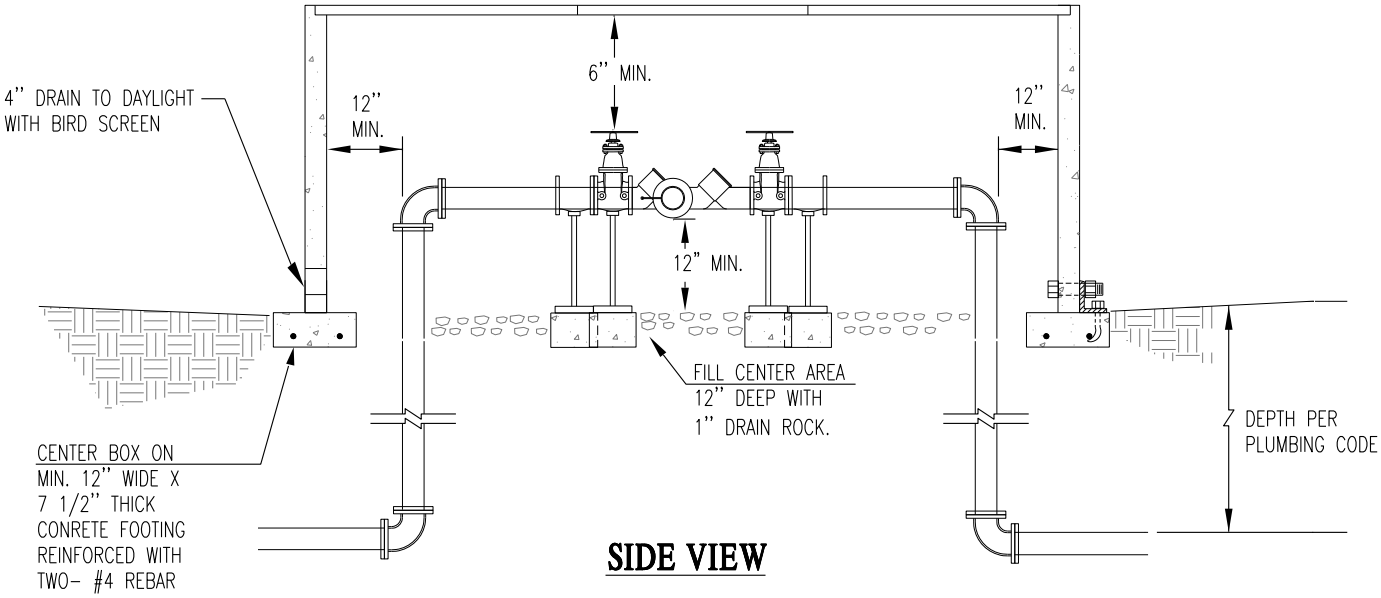

SIDE VIEW

NOTES:

1. MUST BE ON THE LATEST WASHINGTON DEPARTMENT OF HEALTH APPROVED LIST OF BACKFLOW PREVENTION ASSEMBLIES.
2. MUST BE INSTALLED ABOVE GROUND MINIMUM 12 INCHES.
3. MUST BE PROTECTED FROM FREEZING CONDITIONS. INSTALL HEAT TAPE FOR FREEZE PROTECTION.
4. DO NOT INSTALL IN AN AREA SUBJECT TO FLOODING.
5. THE BACKFLOW DEVICE SHALL BE TESTED UPON INSTALLATION BY A QUALITIFED BACKFLOW ASSEMBLY TESTER (B.A.T.) AND TEST RESULTS SENT TO THE CITY OF RICHLAND WATER QUALITY COORDINATOR, THEN RETESTED ANNUALLY THEREAFTER.
6. OWNER SHALL FURNISH, INSTALL AND MAINTAIN THE BACKFLOW DEVICE AND ALL PIPING AND APPURTENANCES SHOWN ON THIS PLAN.
7. THE BACKFLOW DEVICE SHALL BE INSTALLED DIRECTLY DOWNSTREAM OF THE CITY WATER METER.
8. THE BACKFLOW DEVICE SHALL ONLY BE INSTALLED IN THE ORIENTATION FOR WHICH THEY ARE APPROVED.

Richland Washington

REDUCED PRESSURE BACKFLOW ASSEMBLY DEVICES 2"AND SMALLER

PUBLIC WORKS ENGINEERING	
APPR. BY: PKR	DATE: 09.13
DRAWN BY: LD	DWG: W19
CAD FILE: 2013_W19_09_2013	

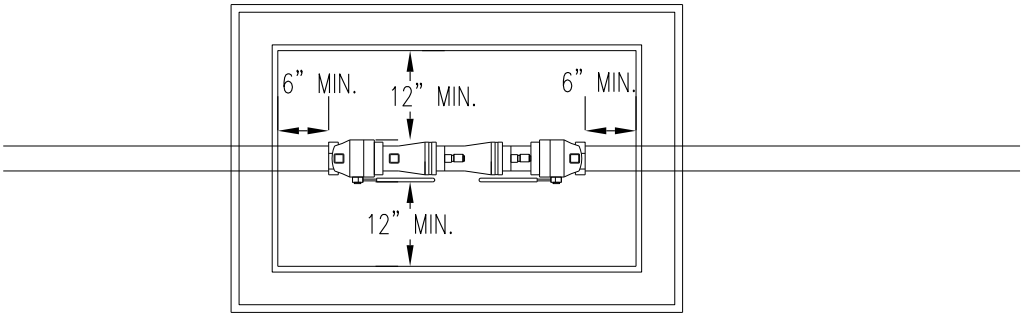

PLAN VIEW

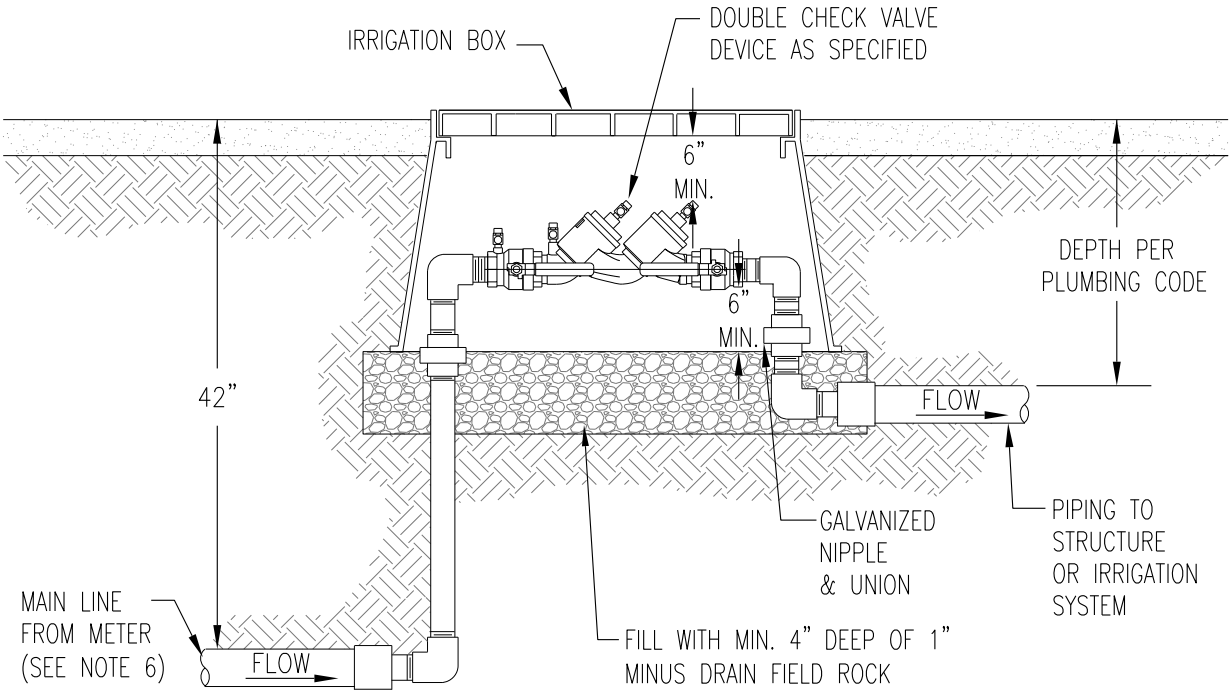

SIDE VIEW

NOTES:

1. MUST BE ON THE LATEST WASHINGTON STATE DEPARTMENT OF HEALTH APPROVED LIST OF BACKFLOW PREVENTION ASSEMBLIES.
2. MAY BE INSTALLED BELOW GROUND IN APPROVED VAULT.
3. THE BACKFLOW DEVICE SHALL BE TESTED UPON INSTALLATION BY A QUALIFIED BACKFLOW ASSEMBLY TESTER (B.A.T.) AND TEST RESULTS SENT TO THE CITY OF RICHLAND WATER QUALITY COORDINATOR, AND THEN RETESTED ANNUALLY THEREAFTER.
4. FREEZE PROTECTION IS THE RESPONSIBILITY OF THE OWNER.
5. RISERS AND ALL PIPE IN BOX TO BE GALVANIZED.
6. THE BACKFLOW DEVICE SHALL BE INSTALLED DIRECTLY DOWNSTREAM OF THE CITY WATER METER.
7. THE BACKFLOW DEVICE SHALL ONLY BE INSTALLED IN THE ORIENTATION FOR WHICH THEY ARE APPROVED.
8. OWNER SHALL FURNISH, INSTALL AND MAINTAIN THE BACKFLOW DEVICE, ALL PIPING AND APPURTENANCES SHOWN ON THIS PLAN.

Richland Washington

DOUBLE CHECK VALVE ASSEMBLY DEVICES 2" OR SMALLER

PUBLIC WORKS ENGINEERING	
APPR. BY: PKR	DATE: 09.13
DRAWN BY: LD	DWG: W20
CAD FILE: 2013_W20_09_2013	