DEPARTMENT OF COMMUNITY & DEVELOPMENT SERVICES
Planning & Development Services Division
625 Swift Blvd. • Richland, WA 99352
Telephone 509-942-7794 • Fax 509-942-7764
www.ci.richland.wa.us

WHEN & HOW TO REQUEST INSPECTIONS

The following list is the typical inspections for most projects. Please notify our office before you cover something up and/or if you have any question about what needs to be inspected. If required by the approved plans, SPECIAL INSPECTIONS are in addition to these typical inspections and are at the expense of the owner. If you are not ready for inspection, the City may require that you pay a re-inspection fee as per the building code. The City of Richland will not accept photographs as a replacement for the actual inspection. To request an inspection via the internet please visit www.buildingdepartment.com (Contractors), or www.buildingdepartment.com/sps (Homeowners). For morning (8:00-11:00) or afternoon (12:30-3:30) inspections, you must request via the internet **before** 4:00 p.m. the previous business day. Requests via the telephone 509-942-7565 will require a 48 hr notice.

1. **FOOTINGS—**when all forms and reinforcing steel are in place, but prior to pouring concrete.
2. **MONOLITHIC or TRENCH FOOTINGS—**when all reinforcing steel, forms, and metal accessory hardware are in place but not covered. You must call for inspection of footing trenches beneath a slab-on-grade, also, such as footings inside a garage or in a basement situation, before pouring the slab.
3. **FOUNDATION WALL—**when all forms, reinforcing steel, and metal accessory hardware (such as hold downs or special bolts) are in place but not covered. Hold-down hardware must be on the site ready to install after pour.
4. **SEWER SERVICE—**when sewer piping is installed and properly graded in the trench but not covered. Please note that public sewers must be inspected by the City engineer's office at (509) 942-7500. Grease traps, interceptors, cleanouts, and other sewer piping appurtenances must be inspected either with this sewer inspection or by separate inspection.
5. **WATER SERVICE—**when water piping from the City water meter to the building is installed and under pressure test but not covered. All backflow devices must be inspected either during this inspection or by separate inspection.
6. **PLUMBING GROUNDWORK—**when the underfloor building drain is installed and under pressure test but not covered.
7. **WATER PIPING—**when all underfloor water piping is installed and under pressure test but not covered.
8. **HEATING DUCT GROUNDWORK—**when duct work is installed but prior to covering.
9. **BOND BEAM IN MASONRY—**in five foot lifts, when all reinforcing steel is in place but prior to grouting. Lifts must be in accordance with the building code and have cleanout holes in the bottom of each cell that contains reinforcing steel.
10. **ROUGH HEATING & VENTILATION—**when all rough-in mechanical work is installed but not covered.
11. **ROUGH PLUMBING—**when all rough-in plumbing is installed and under pressure test but not covered.
12. **FRAMING—**when the building is "dried-in" (roof and roofing are on, siding is completed), all framing completed, anchoring in place and tightened, and the electrical framing inspection has already been signed off by the State L&I office. Please note that because of the many "shear" walls and hold-downs in many of today's homes, the City requires all hold-downs, straps, and shear nailing to be inspected **IN ADDITION TO THE FRAMING INSPECTION** and prior to covering. A ladder is required for all framing inspections.
13. **INSULATION—**when framing inspection is approved and insulation and vapor barrier have both been installed.
14. **SHEETROCK**—when the wallboard is installed and nailed but not filled or taped. Any firewall penetrations must be inspected prior to covering, also.
15. **FINAL INSPECTION—**when all other required department inspections have been finaled & approved (such as State L&I Electrical and City sidewalks) and the building is complete in accordance with all aspects of the approved plans and specifications. **Final grading must be completed**, including all retaining walls and grading to comply with the 2:1 slope requirements of the code. A ladder is required for all final inspections.

Other inspection/installation information:

City sidewalks, curbs, gutters call:	(509) 942-7500
City water meter installation call:	(509) 942-7670
City electrical trench & electrical service connection call:	(509) 942-7421 or (509) 942-7423
Call before you dig, location of underground utilities call:	811
State L&I Electrical inspections call:	(509) 735-0100

Address **Permit #**

PLAN REVIEW CHECKLIST – 2015 IRC Please pay special attention to items that are circled, but all items here must be complied with, even if not circled. IRC Code (2015) references are in parenthesis unless otherwise noted.

GENERAL ITEMS:

1. **NO RETAINING WALLS, NO ROCKERIES, AND NO LANDSCAPE BLOCK WALLS ARE ALLOWED ON THIS SITE WITHOUT A SEPARATE PERMIT.** Final grading of the property & all retaining walls or retaining methods must be done prior to final inspection, even if owner is building required retaining walls. Occupancy of the home will not be allowed until such grading and retaining is complete. A soils engineer & a structural engineer may be required before issuance of retaining wall permit and for grading on this site.

2. Acrylic stucco products have special requirements. Verify such with the manufacturer. Requirements may include tongue and groove foam board under finish, control joints, special backing boards (sometimes OSB is NOT allowed), self-furring or furred-out wire or fabric lath, and sometimes installation by a certified installer (certified by the manufacturer). Verify any and all requirements of stucco siding or acrylic stucco products and follow them. **NO INSPECTION OF LATH OR STUCCO IS REQUIRED, BUT WRITTEN CERTIFICATION BY A MANUFACTURER'S CERTIFIED INSTALLER MUST BE SUBMITTED TO THE CITY BEFORE OCCUPANCY WILL BE ALLOWED.**

3. Inspection of shear wall nailing and roof sheathing nailing, must be requested in addition to standard inspections and before such items are covered up. Please specify shear nail or roof nail when you request these; they may be done simultaneously, if ready.

4. This plan is approved for OSB or plywood exterior wall sheathing only unless the approved plans at the time of permit issuance reflect other materials being used. Any change to wall sheathing material after permit issuance must be submitted to the city for review prior to installation. An additional plan review fee will be assessed.

5. An approved moisture resistive barrier ("Tyvek" or equal, or 15# felt) is required on the exterior side of all walls, regardless of the type of siding used. This includes garage walls, gable portion of end walls, and cripple walls (at stepped foundation conditions). Apply over exterior sheathing or over studs in single-wall construction. **T-1-11 & PANEL SIDING MUST HAVE THIS MOISTURE BARRIER OVER THE STUDS.**

6. Exterior windows and doors shall be flashed with approved materials and caulking. Caulked trim material over the window or door flange is not an acceptable method. City inspectors do not inspect this, but you must still install such flashing per the window manufacturer's specification.

7. Overall dimensions of house plan must match site plan dimensions. Verify any special requirements for buildings located close to property lines. (R302)

LIFE-SAFETY & MISC. ITEMS:

8. Sleeping rooms must have an egress window with 5.7 s.f. net clear opening, 24" min. height, 20" min. width. **WINDOWS MUST MEET ALL 3 DIMENSIONS AND BE 44" MAX. FROM FLOOR TO THE BOTTOM OF THE ACTUAL WINDOW OPENING (NOT THE WINDOW SILL)**. (R310 thru R310.2.4).

9. Safety or tempered glass locations & req's (R308.4)
   - Adjacent to a door (within 24" arc of either edge of the door in a closed position AND less than 60" above the floor)
   - Closer than 18" to floor AND individual pane is more than 9 s.f. AND top edge (of individual pane) more than 36" above floor AND walking surface within 36" horizontally of the window in question.
   - Windows or glazing in the bathroom near a tub or shower within 60" of the drain, or floors outside the tub, and within 60" of the ***water's edge*** including areas outside the tub or shower enclosure. R308.4.5.

- Adjacent to stairways, landings, and ramps within 36" horizontally of a walking surface AND less than 60" above the walking surface.
- Adjacent to stairways within 60" of the bottom tread of the stair in any direction (AND less than 60" above floor or landing)

10. An operable window must be equipped with a fall protection device when the sill is less than 24” above the floor and the window is more than 6-feet above exterior grade (R312.2)

11. Under-stair areas that are enclosed and accessible must be sheet-rocked, 1/2" GWB on walls and underside of the stairway. (R302.7)

12. Stairways shall have 10" min. tread and 7 3/4" max. rise. (R311.7.5)

13. Provide 36" high guards (with 4" max. spacing on rails) at porches, balconies, raised floor surfaces, and fixed seating areas that are more than 30" above adjacent ground or floor. The height of fixed seating areas shall be measured from the seat surface to finished grade or floor below. (R312.1)

14. Smoke detectors are required in all sleeping rooms and in hallways or rooms leading to sleeping rooms. All smoke detectors shall be interconnected and hardwired with battery back-up. (R314.3-R314.4)

15. All new single-family dwellings with an attached garage or fuel-fired appliance shall have hard-wired carbon monoxide alarms installed outside of each separate sleeping area in the immediate vicinity of the sleeping rooms. Remodels in existing dwellings requiring a permit, shall have carbon monoxide alarms installed the same as for new construction (R315.2.2)

16. Garage/house separation wall is 1/2" GWB; door must be self-closing and 20 min. rated or 1 3/8" solid-core. If living space above, use 5/8" GWB Type "X" at the ceiling AND 1/2" GWB at walls that support the floor above. Ducts in garage must be 26 gage sheet steel and have no openings in the garage. (R302.5)

17. Exterior stairways must have a light located near the top landing of the stairway switched from inside (or have motion-activation device). Exterior stairways to basements must have a light at the bottom landing of the stairway. (R303.8)

18. Minimum room areas must be provided; 120 s.f. min. in at least one room, 70 s.f. min. all other habitable rooms, 7 foot min. dimension in all habitable rooms. (R304)

19. Minimum ceiling height of 7 feet must be provided at all habitable rooms; at bathrooms, toilet rooms and laundry rooms, a minimum ceiling height of 6’-8” is required above all plumbing fixtures (sinks and toilets). (R305 & UPC)

FOOTINGS, FOUNDATIONS, AND CRAWL SPACES:

20. All footings including exterior isolated pad footings must have a 24" (min.) depth from the bottom of the footing to finished grade. Isolated footings over 18”X18” in horizontal dimensions must have reinforcing (such as 2-#4 rebar each way). See also item **#42** for total load limits onto isolated footings. (R403)

21. All footings shall be supported on undisturbed natural soils or engineered fill. Any placement of fill material anywhere on a site, including structural fill beneath footing areas, requires a grading permit based upon a geotechnical engineer’s report with the geotechnical engineer’s inspection (and written field report submitted to the City) prior to placement of footing forms. (R401.4 & 403.1)

22. Lots shall be graded to drain surface water away from foundations. The grade shall fall 6" in the first TEN feet around the perimeter of the structure. (R401.3)

23. Top surface of footings shall be level. Bottom surface of footings shall not have a slope that exceeds (1) unit vertical in (10) units horizontal. Any necessary stepping of the foundation must be approved during plan review **OR** prior to installation of the foundation. (R403.1.5)

24. Wood sill plates of all exterior walls, interior bearing walls (slab-on-grade), must be anchored to foundation or slab with ½ " X 10" J-bolts with a 2" X 2" X 3/16" plate washer. Anchor bolts to be placed a maximum of 12" and no closer than 3 ½" from the ends of the sill plate. Each piece of sill plate must have a minimum of (2) anchor bolts. Anchor bolts shall be spaced no further than 6 feet apart and embedded a min. of 7" into foundation. (Special spacing and sizing conditions may apply at alternate braced wall panels). (R403.1.6)

25. 6" clearance required from finish grade to foundation mud-sill plate. (R404.1.6)

26. 3 1/2" (min.) thickness for all concrete slabs-on-grade. (R506.1)

27. Footing and foundation wall *MINIMUM SIZES* for two-pour system and *NOT* over 4 feet in height:

- Footing supporting single story- 12" wide X 6" thick.
- Foundation wall supporting single story- 6" thick
- Footing supporting two stories- 16" wide X 6" thick.
- Foundation wall supporting two stories- 8" thick.
- Foundations that support more than two stories require an engineered design.

28. Footing and foundation *REINFORCEMENT* for two-pour system and *NOT* over 4 feet in height:

- One continuous #4 horizontal rebar placed at center of footing with 3" (min.) clearance from dirt.
- One continuous #4 horizontal rebar placed within the top 12" of the stem wall.
- #4 vertical rebar placed at 48 inches o.c. max (wet set ok), with a 6-inch, 90-degree hook. A minimum of (2) vertical bars to be placed at front garage wall returns.

29. Monolithically poured (single-pour footing/foundation/slab) foundation systems:

- Bottom of footing shall be 12" wide (min.) and extend to 24" below finished grade minimum.
- Footing shall have either one #5 continuous, horizontal rebar placed at center and 8" above bottom of footing, **or** (2) #4 continuous, horizontal rebar placed at center and in the middle third of the footing measuring vertically.
- 3 1/2" minimum slab thickness.
- When a monolithic system is used to support heated spaces, an R-10 insulation board must be installed on the outside of the foundation extending from bottom of footing to top of slab. Exposed foam insulation above grade must be protected from damage and sun with approved materials. The material used must extend a minimum of 12" below grade.

30. Basement Walls up to 9 feet:

- Footing shall have two continuous #4 horizontal rebar.
- Foundation wall shall have #4 continuous horizontal rebar at 18" o.c. max. (18"X18" rebar grid).
- #4 vertical rebar at 18" o.c. max, with a 6", 90 degree alternating hook to the footing reinforcing.

NOTE: Items #27, #28, #29 and #30 are for non-engineered footings & foundations; geotechnical reports, lateral designs, and other engineering may require different reinforcing so PLEASE follow your approved set of plans. Item #30 cannot be used for stem walls that step down because floor connection is required.

31. Access shall be provided to all under-floor spaces. Access openings through the floor shall be a minimum of 18" x 24". Openings through a perimeter wall shall be a minimum of 16" x 24". (R408.4)

32. Under-floor spaces shall be ventilated by openings providing one (1) square foot of vent area per 150 square feet of crawl space area. One such ventilating opening shall be within 3 feet of each corner of the building. (R408.2)

33. A ground cover of 6 mil black polyethylene or approved equal shall be laid over the ground within crawl spaces. The ground cover shall be overlapped 6" and extend to the foundation wall. (WSEC 402.4.1.1)

34. Thickened-slab footings (interior bearing walls) must be 12" min. total depth (top of conc. slab to bottom of footing = 12" total) by 12" min. width. (R403.1.1)

35. Foundation cripple walls shall be framed of studs not less in size than the studding above. Cripple walls with a height less than 14 inches shall be sheathed on one side with a wood structural sheathing or shall be of solid blocking. Cripple walls count as an additional "story" for lateral purposes. (R602.9)

FLOOR FRAMING:

36. 18" (min.) clearance beneath all floor joists and 12" (min.) clearance beneath floor girders (beams) in crawl spaces. (R317.1)

37. Span of all joists (including 2nd level joists) must be designed for a minimum live load of 40 psf (general living areas) or 30 psf (sleeping rooms) and 10 psf dead load (or actual weight of materials if more than 10 psf, such as concrete floors or other heavy materials). (R301.5 and Table R301.5)

38. Wood posts taller than 48" in the crawl space shall have a connection to the concrete footing or pier and a moisture barrier between the post and footing. (R407.3)

39. Solid-sawn floor joists shall be blocked at all bearing points. Engineered floor joists shall be installed per manufacturer's specifications. (R502.7)

40. Cutting, drilling, and notching of floor joists shall not exceed the limitations in Figure R502.8 (see City handout). (R502.8)

41. Cutting, drilling, and notching of engineered I-joists shall be in accordance with the manufacturer's specifications. (R502.8.2)

42. All concentrated point loads originating from roof or floor load shall be transferred to bearing footings or foundation walls (with applicable details of column size, connection, etc.). Point loads over 15,000 pounds onto an isolated footing require design by licensed professional engineer. Point loads over 20,000 pounds onto a stem wall require design and details by a licensed professional engineer. (R301.1)

43. All foundation plates, sills, and sleepers bearing on a concrete foundation or slab that is in direct contact with the ground shall be pressure treated. All wood framing members that rest on concrete foundations and are within 8" of exposed ground shall be pressure treated. (R317.1)

44. Sawn lumber floor joists shall have 1½" (min.) bearing and shall lap 3" min. at intermediate girders. Engineered I-joists shall have 1 3/4" (min.) bearing (or per manufacturer's specifications). (R502.6)

45. Floor joists that are parallel to bearing partitions shall be doubled. Some heavier load cases will require girder beams or pony walls. Bearing partitions perpendicular to floor joists shall not be offset from the supporting girder more than the depth of the joists unless the floor joists are of sufficient size to carry the load. (R502.4)

46. Floor cantilever spans shall not exceed the depth of the nominal floor joists. Floor cantilevers constructed in accordance with Table R502.3.3 (1) shall be permitted when supporting a light framed bearing wall and roof only. (R502.3.3)

47. Block in between floor joists beneath all interior braced walls (for walls perpendicular to joists) or align floor joist with interior braced wall. (R602.10.8)

48. A deck attachment is required to attach the deck to the actual house floor framing. Use either a “tension tie” (1500 lb. capacity) from the deck joists into the house joists at two locations within 24” of the ends of the deck OR hold-down tension devices (750 lb. capacity) at not less than 4 locations per deck. (R507.2.4, Figures 507.2.3(1) & (2))

#’s 49 & 50 not used

WALL FRAMING:

51. Most bearing walls over 10’ will require an engineered design. (602.3 (5))

52. Non-load bearing stud heights shall be in accordance with Table R602.3 (5).

53. Where joists, trusses, or rafters are spaced more than 16" o.c. and the bearing studs below are spaced at 24" o.c., such members shall bear within 5" of the studs below unless the top plates are double 2x6, or a third plate is added. (R602.3.3)

54. Headers over windows and doors must meet minimum requirements for spans and imposed loads, verify point loads over openings (from trusses or other conditions) and size headers accordingly. Headers must be noted with size, type, and grade of lumber being used.
General note stating “all headers shall be_____” is acceptable.

55. Interior bearing walls must have headers over openings and must be supported to a foundation.

56. Top plate splices shall be offset a minimum of 24 inches. (R602.3.2)

57. Fire-blocking required at dropped ceilings, soffits, coved-ceiling areas, and every ten feet horizontally and vertically at framed walls. (R302.11)

58. The City of Richland is within a **Seismic Design Category of C** where designed in accordance with the IRC. (R301.2.2.1.1) The seismic provisions for irregular buildings do not apply to one and two family dwellings. (R301.2.2) Please note that the following irregular features still require a lateral design done by a licensed professional engineer for townhouses. Engineered lateral design on only portions of a structure are not allowed except in very limited instances. Please contact the City if you or your engineer can justify qualifying for the exception concerning design of portions of the structure. (R301.2.2.2.5 Irregular)

- **A.** Exterior braced wall lines must be in one plane vertically from foundation to the uppermost story (basically, the upper floor must match the lower floor footprint).
- **B.** The perimeter of all floor diaphragms and all roof diaphragms must be supported on WALLS below. If you have beams holding up any part of the perimeter of a floor or a roof, then your proposed house is IRREGULAR, and this includes large, covered porches or raised concrete decks. Changes in the plate line are considered discontinuous diaphragms and make the structure IRREGULAR in some cases.
- **C.** In any elevation of the exterior, the braced walls from an upper level wall must NOT occur over a window or door below. In general, this means that the windows of the upper story must align with the windows of the lower story. There are some exceptions based on up-sizing the header in the window below (see R301.2.2.2.2.5, item #3).
- **D.** When an opening in a floor or roof (such as a balcony-overlook area or a courtyard area) exceeds the lesser of 12 feet or 50% of the least dimension, then your proposed house is IRREGULAR.
- **E.** When portions of a floor level are vertically offset (such as a “sunken” room), then your proposed house is IRREGULAR. This does not apply to a slab-on-grade floor.
- **F.** When braced wall lines do not occur in two perpendicular directions (such as portions of the house or garage at an “angle” to the rest of the building), then your proposed house is IRREGULAR.
- **G.** If you have any portion of the above-grade walls that use masonry or concrete construction, then your proposed house is IRREGULAR. Stepped foundations that create a daylight basement situation are OK under this provision and do not make an irregular structure.
- **H.** Three story max. including daylight basement, two stories above daylight basement.

59. 2015 IRC METHODS FOR BRACING (R602.10) Because the City of Richland has determined that the entire City falls within Seismic Design Category C, the following bracing requirements are simplified from this section of the IRC for the most common types of homes being built. Some unusual residential designs and **ALL** townhouses must follow the exact wording and tables of any and all parts of R602.10 because additional bracing (adjustment factors) may apply. The IRC does not allow any plate lines over 12 feet high. This simplified checklist is for CONTINUOUSLY SHEATHED houses only. There are provisions for "intermittent" bracing in the IRC, but they are not shown in the following items. If you intend on using "intermittent" bracing, you must clearly show how it complies with the IRC Section R602.10 on your plans. Be aware that, generally speaking, more bracing (see % in #61 below) is required for intermittent bracing.

60. In order to determine the required number of brace wall lines and minimum lengths of wall bracing, the proposed design shall be designed in accordance with one of the following:

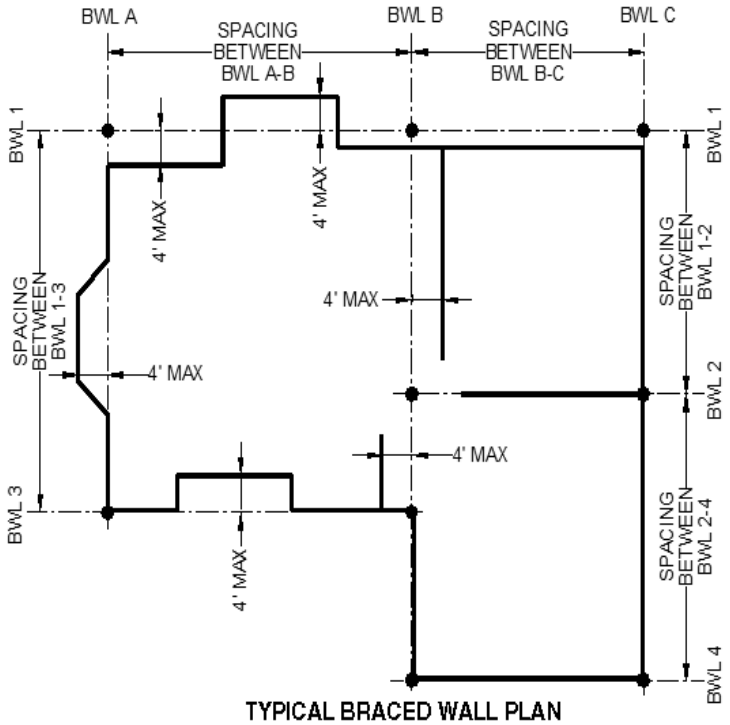

TYPICAL BRACED WALL PLAN

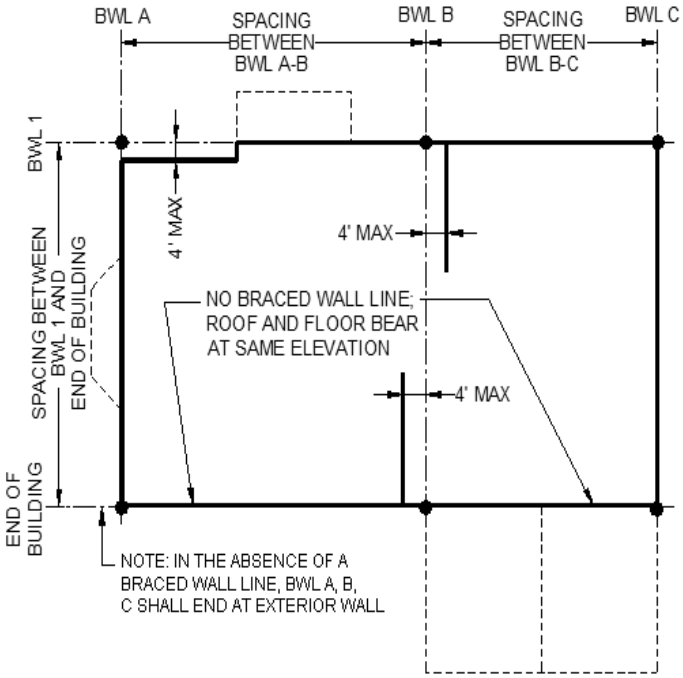

TYPICAL UPPER FLOOR BRACED WALL PLAN

A. Per the wind adjustment factors provided in Table R602.10.3(2). Please note that the plans provided shall include a table summarizing the braced wall lines, bracing method, adjustment factors, minimum length of bracing required, and total length of bracing provided.

B. Per the Simplified wall bracing method. (R602.12) Please note that if using the simplified wall bracing method, the plan shall specify the use of this method and provide the minimum number of bracing units per Table R602.12.4.

61. Braced Wall Panels (BWP) must begin within 10 feet (12 feet permitted for simplified wall bracing method, see #60) from each end of a braced wall line and then every 20 feet (measured between adjacent edges of the panels). Please show the braced wall panels on your floor plans (including any interior braced walls).

62. Reserved

63. Continuously Sheathed Wood Structural Panel (CS-WSP) Braced Wall Panel (BWP) units must meet the minimum length requirements based on the opening (window or door) that is adjacent to the braced wall panel, but the total of all BWP must still add up to the minimum length required by item #60 and be spaced as per item #61. Check the length based on the opening height in the following Table. R602.10.5

Window or Door Height (inches)	Wall Height 8 foot PL	Wall Height 9 foot PL	Wall Height 10 foot PL
64	24	27	30
68	26	27	30
72	27	27	30
76	30	29	30
80	32	30	30
84	35	32	32
88	38	35	33
92	43	37	35
96	48	41	38
100	n/a	44	40
104	n/a	49	43
108	n/a	54	46
112	n/a	n/a	50
116	n/a	n/a	55
120	n/a	n/a	60

A. Alternate Braced Walls—single-story condition (2'-10" min. width X 10 foot max. height), sheathed on one side (interior or exterior OK) with min. 3/8" OSB or plywood and nailed with 8d common or galv. box nails and blocked at all edges. Two (2) anchor bolts in sill plate & two (2) hold-down devices @ furthest studs (1800 pound capacity hold-downs).

B. Alternate Braced Walls—first floor of two-story condition (2'-10" min. width X 10 foot max. height). Two (2) anchor bolts in sill plate & two (2) hold-down devices @ furthest studs (3000 pound capacity hold-downs).

64. Special provision for Garages (CS-G Provision in Table R602.10.4) with 24” minimum side panels (for 8 foot plate line), 27” minimum side panels (for 9 foot plate line), and 30” minimum for up to 10 foot high plates line. This provision restricts the garage to 1-story (no bonus room or 2nd floor over).

65. Special provision for Garages (CS-PF) for a portal frame. This portal frame may have a PONY WALL on top of it for a maximum overall plate line of 12 feet (without design by an engineer). Strap at backside (inside face) of portal frame connection required to connect pony wall to portal frame with strap capacity per Table R602.10.6.4. This portal frame must occur on both sides of the garage door. This portal frame replaces the % requirements of item #62, but ONLY for the garage. All other parts of the house must meet the minimum % and lengths for BWP (see item #62 and #63 where the portal frame counts as 48” of bracing).

66. Truss blocking shall be provided in accordance with the truss manufacturers engineered design and **MUST OCCUR OVER ALL BRACED WALL PANELS**, including continuously sheathed braced wall lines. Where the distance between the top of rafters or roof trusses and the wall top plate is between 9-1/4 inches and 15-1/4 inches, blocking shall be provided by the truss manufacturer or constructed per Figure R602.10.8.2(1). For ventilation, use not more than two (2), 2” diameter holes in the block. The IRC allows edge nailing of the roof sheathing (8d @ 6” o.c.) to occur into a 2x structural fascia as long as there is an enclosed soffit with blocking behind it (see handout). This blocking requirement applies to all houses, both engineered **AND** prescriptive bracing. (Table R602.3(1))

ROOF & ATTIC:

67. Truss drawings must show reactions of all girder trusses; point loads onto headers must have headers sized accordingly; point loads over 5000 lbs. onto double-top plates must be checked for bearing capacity. Use "Simpson" brand TBE4 or TBE6 as needed to spread the load.

68. Truss bottom chord live load must be minimum of 10psf (see Table R301.5). Trusses must be sized for the roof coverings specified on the plans (concrete tile, etc.) and roof structure must be able to hold up the roof (beams, headers, etc., sized for roof loads). (R802.10.2)

69. Ice Shield is required for roofs up to 6:12 (6:12 and over DO NOT require ice shield). (R905.1.2)

70. Attic ventilation must be provided at 1/150th of the attic area or 1/300th of the attic area if 50% of the venting can be 3 feet above the eave venting (roof jack vents are 49 sq. in./vent, ridge vents at 12 sq. in./foot). (R806.1)

71. For attics with mechanical equipment, a light and switch near opening, and electric outlet are required. Access opening to such mechanical equipment must be no further than 20 feet from equipment with 22" wide (min.) walkway from access opening to the equipment. (M1305.1.3)

72. Attic access is required for attic areas that have a vertical height of 30” or greater over an area of not less than 30 sq ft. Access opening shall be 22" X 30" min. and shall be in hallway or other readily accessible location. (R807.1)

MECHANICAL:

73. Appliances located in a garage or carport shall be protected from damage from vehicles. (M1307.3.1)

74. Gas appliances located in a garage shall be raised 18" min. above finish floor or listed as flammable-vapor-ignition resistant. G2408.2 Provide combustion air, either all outdoor air (most common) or in garage (all inside air); see attached handout.

75. Ductwork that extends below grade (such as in the garage floor) shall be encased in 2" min. concrete on all sides and bottom in addition to the R-10 insulation foam board. (603.8 IMC)

76. Dryer exhaust ducts shall not exceed 25 feet in length. The maximum length of the duct shall be reduced 2.5 feet for each 45-degree bend and 5 feet for each 90-degree bend. Longer lengths in accordance with the manufacturer’s listing will be allowed. Screws shall not be used to connect any dryer duct materials. (M1502.4.5)

77. Flex duct connections to sheet metal transition ducts shall have the inner sleeve taped with approved materials prior to securing the flex duct with a zip tie or similar fastener.

78. Flex duct shall be supported every 4 feet and have no sag that exceeds ½” per foot.

79. All exhaust fan ducts shall be connected to the fan housing and termination fittings with a minimum of 3 sheet metal screws and be sealed with approved tape or mastic.

80. Exhaust fans required, 50 cfm in bathrooms, 100 cfm in kitchen, 50 cfm min. in laundry room, and one fan sized for whole-house ventilation. (M1507.4)

81. Fuel-burning equipment shall not be installed in a closet, bathroom, or a room readily usable as a bedroom.

82. Water heaters must be secured to structure with straps around tank at 1/3 point to resist lateral displacement. (M1307.2)

PLUMBING:

83. Cleanouts shall be installed on all sinks and at the upper end of all building drains including any horizontal drain branches greater than 5 feet in length from the main line. A cleanout shall also be installed on the exterior of the house within 24 inches of the foundation wall.

84. 30" min. width for toilet and 24" clear space in front of toilet (UPC)

85. Provide hammer arrestors at quick-acting valves such as washing machine hookup. (UPC 609.10)

86. Drainage piping serving fixtures that are located below the elevation of the next upstream manhole cover of the public sewer serving such drainage piping shall be protected from backflow of sewage by installing an approved type backwater valve. Fixtures above such elevation shall not discharge through the backwater valve. (UPC 710)

ENERGY:

The State of Washington adopted an energy code effective July 1, 2015. Copies of the *Washington State Energy Code* can be found online via https://fortress.wa.gov/ga/apps/sbcc/default.aspx (under the tab entitled "State Codes")

U-value for windows:	0.30
U-value for skylights:	0.50
Ceiling Insulation:	R49
Wood-frame wall insulation:	R21 interior
Floor insulation (crawl):	R30
Floor insulation (slab):	R10, 2 ft.
Basement furred wall:	R21 plus a thermal break (req'd.) between slab and bsmt. wall on the interior side

This new energy code allows trade-offs if you provide the City with an overall proposed house UA calculation (15% glazing) in accordance with R402.1.4 of the 2015 WSEC-Residential section (Table 402.1.3). The computer program called REScheck or another ASHRAE approved computer program is acceptable.

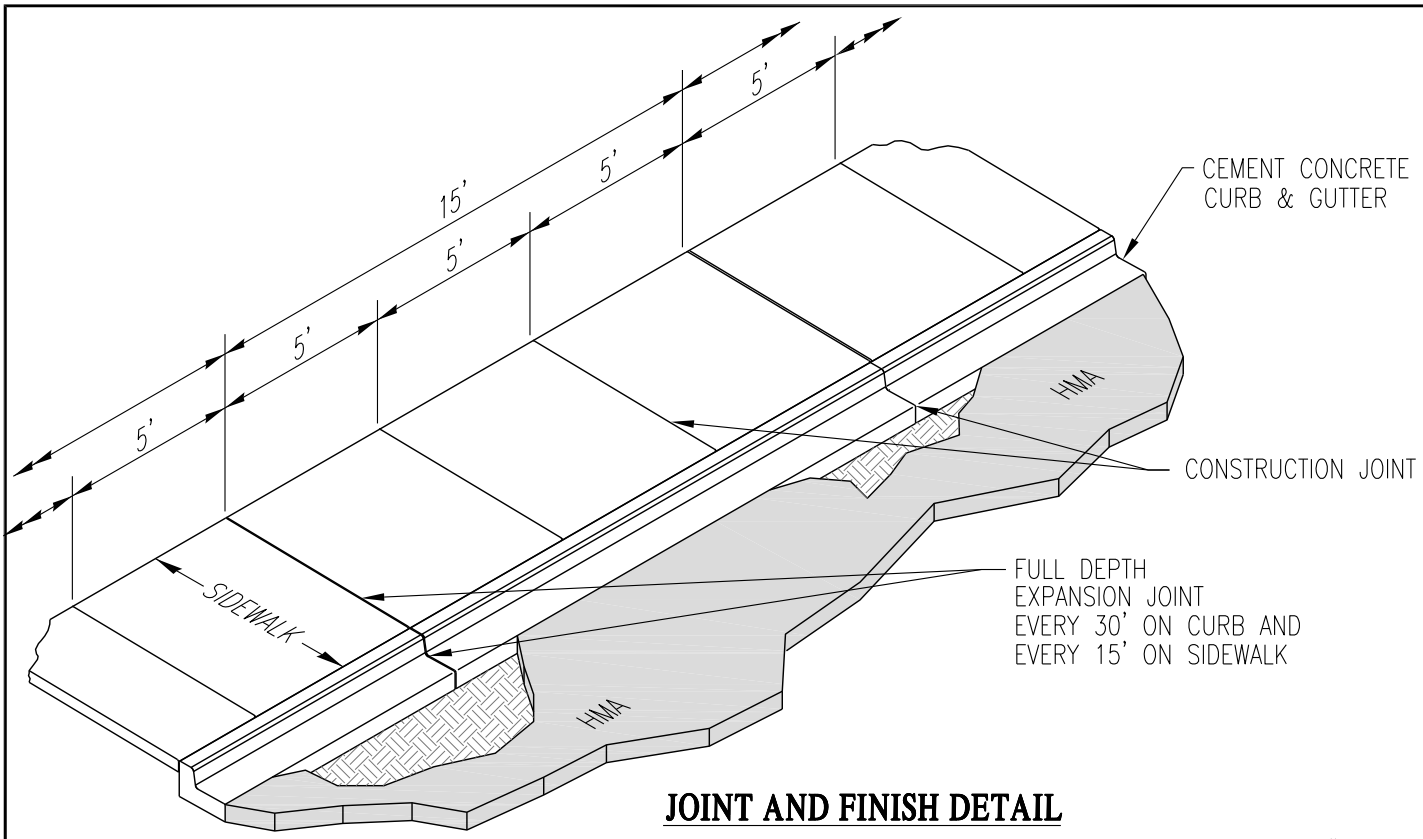

JOINT AND FINISH DETAIL

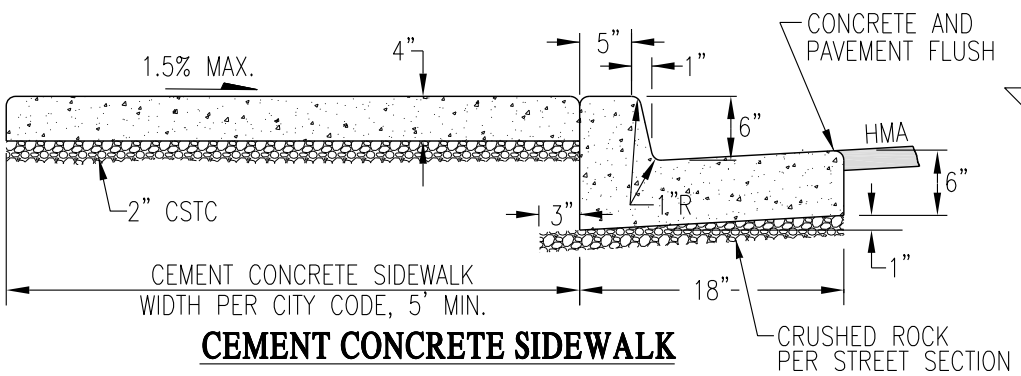

CEMENT CONCRETE SIDEWALK

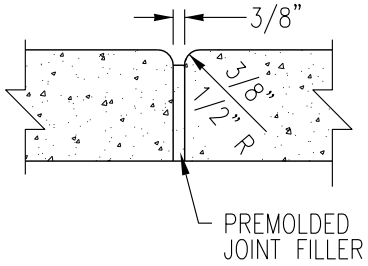

EXPANSION JOINT

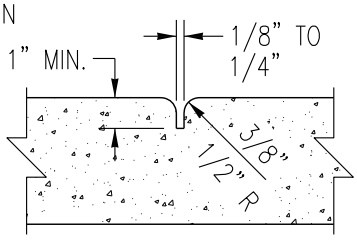

CONSTRUCTION JOINT

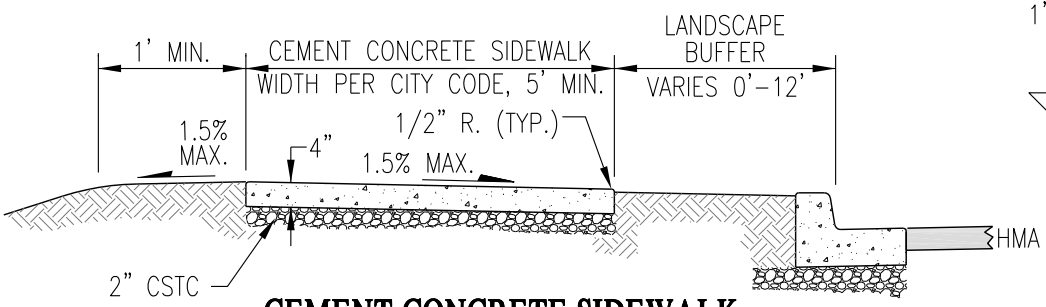

CEMENT CONCRETE SIDEWALK

NOTES:

1. SEE STANDARD DETAIL ST7 FOR CURB, GUTTER AND SIDEWALK NOTES.
2. INSTALL 3/8" FULL EXPANSION JOINTS IN CURB AT ALL PC'S, PT'S AND CURB RETURNS.
3. ALL FILETS 1/2" UNLESS OTHERWISE NOTED.
4. FINISHED GRADE ADJACENT TO SIDEWALK OR CURB SHALL BE 1" BELOW TOP OF CONCRETE SURFACE.

Richland Washington

CURB, GUTTER & SIDEWALK

CIVIL & UTILITY ENGINEERING	
APPR. BY: PKR	DATE: 09.13
DRAWN BY: LD	DWG: ST1
CAD FILE: 2013_ST1_09_2013	

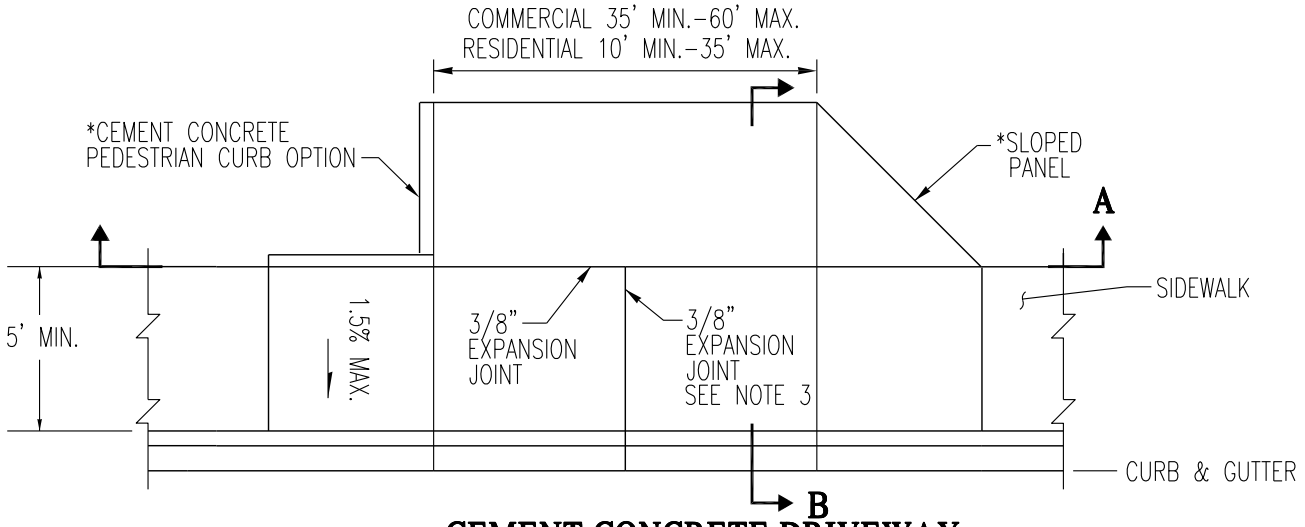

CEMENT CONCRETE DRIVEWAY

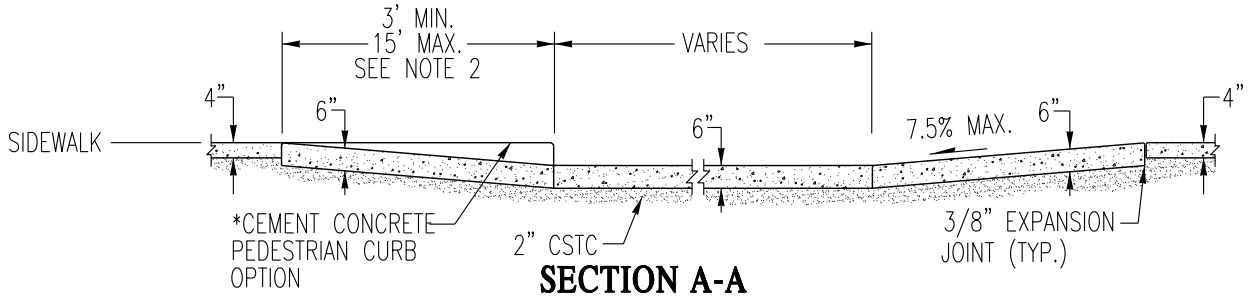

SECTION A-A

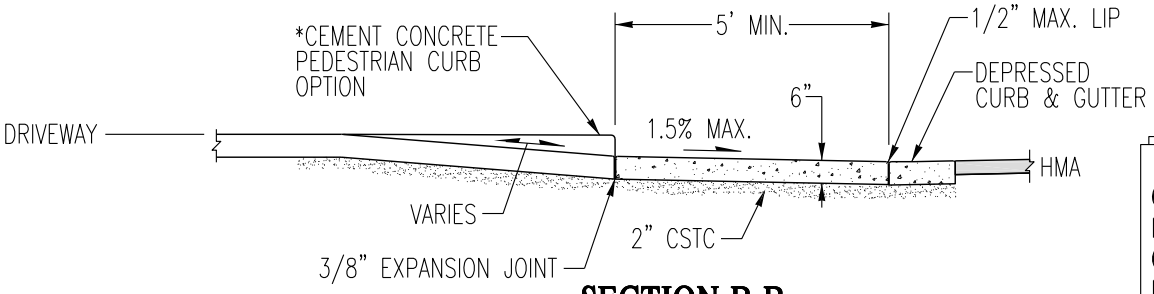

SECTION B-B

*NOTE:
OPTION USED WILL BE DETERMINED BY CITY ENGINEER; DEPENDENT UPON FIELD CONDITIONS.

NOTES:

1. SEE STANDARD DETAIL ST7 FOR CURB, GUTTER AND SIDEWALK NOTES.
2. THE CURB RAMP MAXIMUM RUNNING SLOPE SHALL NOT REQUIRE THE RAMP LENGTH TO EXCEED 15' TO AVOID CHASING THE SLOPE INDEFINITELY WHEN CONNECTING TO STEEP GRADES. WHEN APPLYING THE 15' MAXIMUM LENGTH, THE RUNNING SLOPE OF THE CURB RAMP SHALL BE AS FLAT AS FEASIBLE.
3. WHEN THE DRIVEWAY WIDTH EXCEEDS 15', CONSTRUCT A FULL DEPTH EXPANSION JOINT WITH 3/8" JOINT FILLER ALONG THE DRIVEWAY CENTERLINE. CONSTRUCT EXPANSION JOINTS PARALLEL WITH THE CENTERLINE AS REQUIRED AT 15' MAXIMUM SPACING WHEN DRIVEWAY WIDTHS EXCEED 30'.

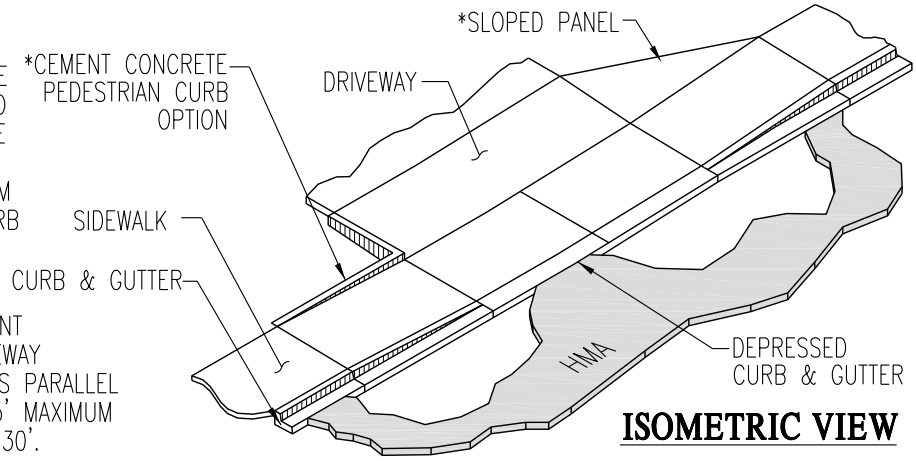

ISOMETRIC VIEW

Richland Washington

STANDARD DRIVEWAY

CIVIL & UTILITY ENGINEERING	
APPR. BY: PKR	DATE: 09.13
DRAWN BY: LD	DWG: ST2
CAD FILE: 2013_ST2_09_2013	

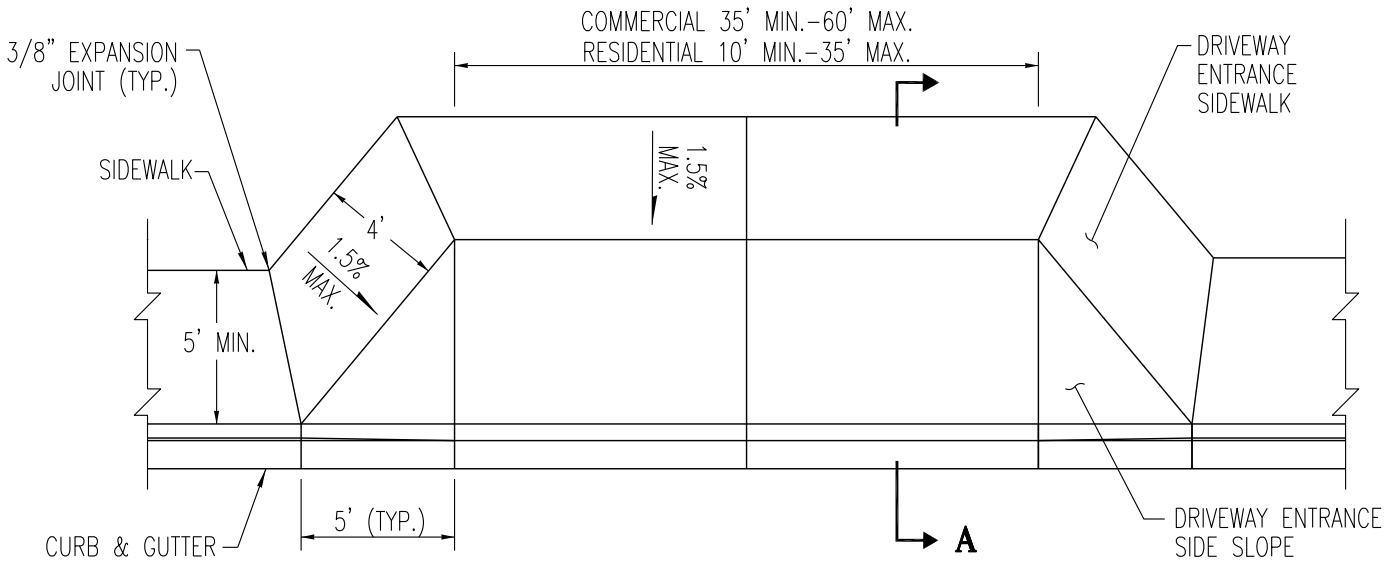

CEMENT CONCRETE DRIVEWAY

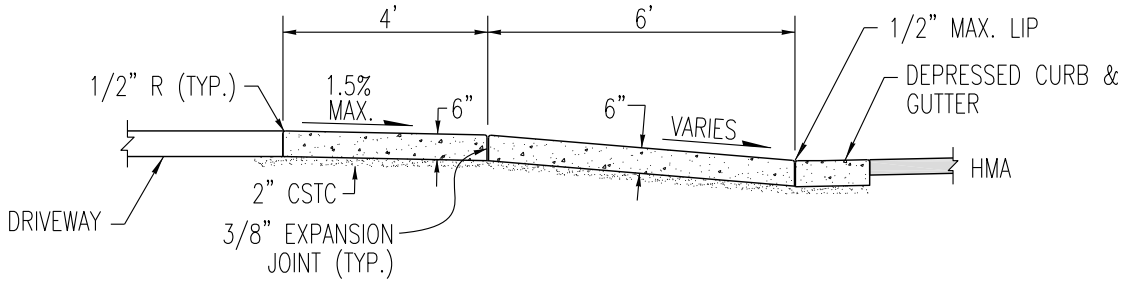

SECTION A-A

NOTES:

1. SEE STANDARD DETAIL ST7 FOR CURB, GUTTER AND SIDEWALK NOTES.
2. THE CURB RAMP MAXIMUM RUNNING SLOPE SHALL NOT REQUIRE THE RAMP LENGTH TO EXCEED 15' TO AVOID CHASING THE SLOPE INDEFINITELY WHEN CONNECTING TO STEEP GRADES. WHEN APPLYING THE 15' MAXIMUM LENGTH, THE RUNNING SLOPE OF THE CURB RAMP SHALL BE AS FLAT AS FEASIBLE.
3. WHEN THE DRIVEWAY WIDTH EXCEEDS 15', CONSTRUCT A FULL DEPTH EXPANSION JOINT WITH 3/8" JOINT FILLER ALONG THE DRIVEWAY CENTERLINE. CONSTRUCT EXPANSION JOINTS PARALLELWITH THE CENTERLINE AS REQUIRED AT 15' MAXIMUM SPACING WHEN DRIVEWAY WIDTHS EXCEED 30'.

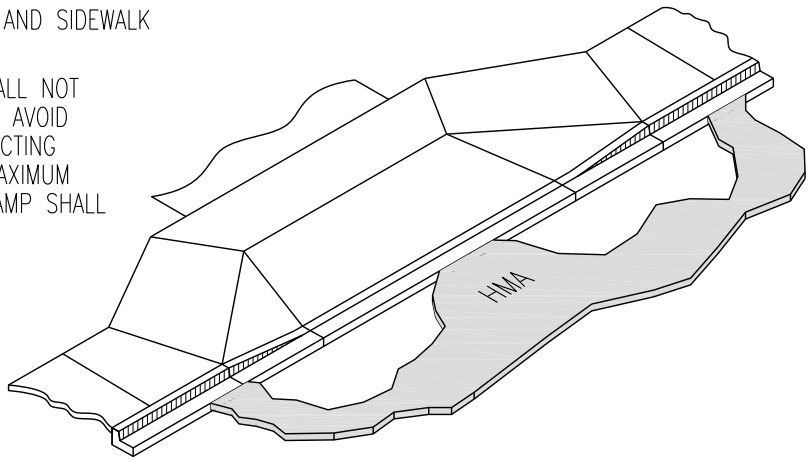

ISOMETRIC VIEW

Richland Washington	STANDARD DRIVEWAY (OPTIONAL)	CIVIL & UTILITY ENGINEERING
		APPR. BY: PKR — DATE: 09.13
		DRAWN BY: LD — DWG: ST3
		CAD FILE: 2013_ST3_09_2013

CONSTRUCTION NOTES FOR PEDESTRIAN FACILITIES

1. ASPHALT PATCHING – SAWCUT A MINIMUM OF 24" OF ASPHALT BEYOND THE FACE OF NEW GUTTER, REMOVE ALL DEBRIS AND ADD CRUSHED SURFACE TOP COURSE (CSTC) AS NEEDED. COMPACT AREA, PLACE HMA AND COMPACT AS REQUIRED.
2. CONCRETE SHALL HAVE A MINIMUM COMPRESSIVE STRENGTH OF 3000 PSI FOR SIDEWALKS. CONCRETE FOR CURB, GUTTER AND DRIVEWAYS SHALL HAVE A MINIMUM COMPRESSIVE STRENGTH OF 4000 PSI.
3. CONTRACTOR SHALL CALL FOR CITY INSPECTION PRIOR TO CUTTING AND/OR REMOVING CURB, GUTTER, AND SIDEWALK. THE INSPECTOR WILL MARK AREA TO BE CUT OR REMOVED. CONTRACTOR'S PRESENCE IS ADVISABLE.
4. CONTRACTOR SHALL CALL FOR INSPECTION OF ALL FORMS PRIOR TO POURING CONCRETE FOR CURB, GUTTER, SIDEWALK AND DRIVEWAYS. ALL EXPANSION JOINTS SHALL BE IN PLACE AT TIME OF INSPECTION. ("WET SET" MASTIC IS NOT ALLOWED)
5. THE INSPECTOR SHALL CHECK ALL JOINT LOCATIONS. ALL EXPANSION JOINTS SHALL BE MARKED WITH AN "M".
6. CONTRACTOR SHALL NOT POUR ANY CONCRETE UNTIL ALL JOINTS HAVE BEEN CHECKED AND GIVEN VERBAL OR WRITTEN APPROVAL BY INSPECTOR.
7. THE FACE OF CURB SHALL BE STAMPED AT ALL UTILITY CROSSINGS, MAIN LINES AND SERVICE LINES AS FOLLOWS: "S"–SANITARY SEWER, "W"–WATER, "I"–IRRIGATION, "C"–CONDUITS
8. CURB, GUTTER, AND SIDEWALK SURFACES SHALL HAVE A LIGHT BROOM FINISH. SIDEWALK SHALL BE BROOMED PERPENDICULAR TO CURB LINE IN A UNIFORM AND CONSISTENT MANNER.
9. A MINIMUM OF 2" OF CSTC SHALL BE PLACED AND COMPACTED UNDER ALL CURB, GUTTER AND SIDEWALK.
10. JOINT SPACING SHALL BE NO LESS THAN 2.5' AND NO GREATER THAN 5'.
11. SIDEWALKS SHALL BE A MINIMUM OF 5 FEET WIDE. IN COMMERCIAL ZONED C–2, C–3, AND CBD AREAS THE SIDEWALKS SHALL BE 8 FEET WIDE.
12. WHEN UTILITY METERS, VAULTS, TRANSFORMERS, ETC. EXIST IN THE AREA BETWEEN THE LOT LINE AND THE DRIVEWAY, THE DRIVEWAY MUST BE CONSTRUCTED AT LEAST 10' FROM THE LOT LINE.
13. IF A CONCRETE DRIVEWAY IS TO BE EXTENDED PAST THE R/W LINE A 3/8" MASTIC EXPANSION JOINT SHALL BE INSTALLED FULL LENGTH OF DRIVEWAY AND FULL DEPTH OF DRIVEWAY AT THE BACK OF SIDEWALK. DRIVEWAY SHALL LINE UP WITH THE BOTTOM OF THE DRIVEWAY TRANSITIONS IN THE CURB AND GUTTER.
14. MAINTAIN 4' MINIMUM CLEARANCE FROM ANY OBSTRUCTION ON SIDEWALK AND SIDEWALK RAMP.
15. AVOID PLACING DRAINAGE STRUCTURES, JUNCTION BOXES, OR OTHER OBSTRUCTIONS IN FRONT OF DRIVEWAY ENTRANCES.
16. AT NO TIME SHALL ANY SLOPES EXCEED CURRENT ADA STANDARDS.

Richland Washington

CURB, GUTTER & SIDEWALK NOTES

CIVIL & UTILITY ENGINEERING	
APPR. BY: PKR	DATE: 09.13
DRAWN BY: LD	DWG: ST7
CAD FILE: 2013_ST7_09_2013	

EXAMPLE EROSION CONTROL PLAN

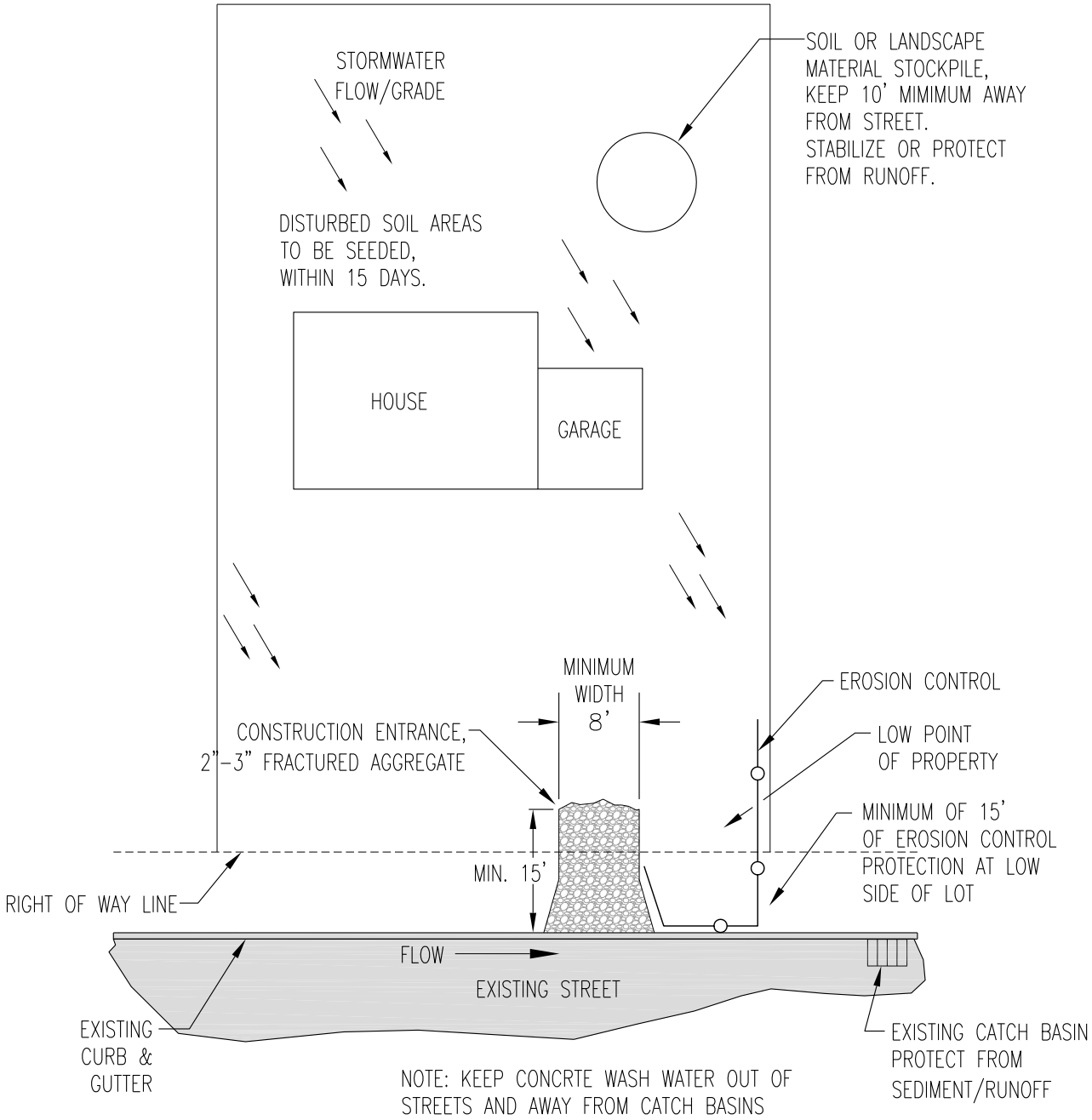

EROSION CONTROL MEASURES

KEEP RUNOFF OUT OF THE STREET WITH ONE OF THE FOLLOWING METHODS:

1. SILT FENCING OR
2. EXCAVATE 5-FEET x 6-INCH DEEP BEHIND CURB AND STABILIZE WITH HYDRO SEED, ROCK OR MULCH. (SEE DETAIL AT RIGHT)

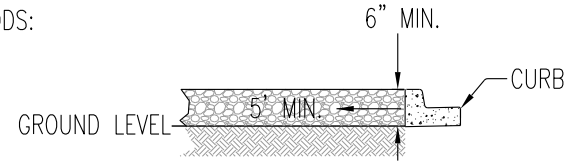

DETAIL

Richland Washington	EROSION CONTROL PLAN CONSTRUCTION BMP'S SHEET 1 of 3	CIVIL & UTILITY ENGINEERING
		APPR. BY: PKR — DATE: 05.14
		DRAWN BY: JG — DWG: S16
		CAD FILE: 2014_S16-1_05_2014

SUGGESTED BMP'S FOR RESIDENTIAL CONSTRUCTION SITES

NOTE: PUBLIC WORKS WILL INSPECT THE SITE FOR SOIL/SEDIMENT STABILIZATION.

WARNING! EXTRA MEASURES (Beyond the BMP's) MAY BE NEEDED IF YOUR SITE:

- IS WITHIN 300-FEET OF A STREAM OR STORM DRAIN INLET THAT LEADS TO A STREAM.
- IS STEEPLY GRADED (SLOPES OF 5% OR MORE).
- RECEIVES RUNOFF FROM ADJACENT LAND.
- HAS MORE THAN AN ACRE OF DISTURBED GROUND.

Soil/Landscaping Piles:

1. DO NOT STOCKPILE SOIL OR LANDSCAPING MATERIALS IN THE STREET.
2. LOCATE AWAY FROM ANY DOWNSLOPE STREET, DRIVEWAY, STREAM, WETLAND, DITCH OR DRAINAGE WAY. COVER WITH PLASTIC OR HYDROSEED.
3. TEMPORARY DROUGHT-TOLERANT SEEDING OR TACKIFIER IS RECOMMENDED FOR TOPSOIL PILES.

Storm Drain Inlet Protection:

1. PROTECT THE NEAREST DOWNSTREAM STORM DRAIN INLET IN THE CITY STREET WITH SILT FENCES, SILT FABRIC OR EQUIVALENT MEASURES.
2. INSPECT, REPAIR AND REMOVE SEDIMENT DEPOSITS FROM LOW AREAS AND STREET AFTER EVERY STORM OR RUNOFF EVENT.

Sediment Cleanup:

1. BY THE END OF EACH WORK DAY, SWEEP OR SCRAPE UP SOIL TRACKED ONTO THE ROAD. DO NOT HOSE INTO STORM DRAIN SYSTEM.
2. BY THE END OF THE NEXT WORK DAY AFTER A STORM, CLEAN UP SOIL WASHED OFF-SITE.
3. REMEMBER TO CONTROL YOUR DUST, BUT TOO MUCH WATERING CAN LEAD TO RUNOFF OF SEDIMENT-LADEN WATER INTO THE STREET OR NEIGHBORING LOT.

Vegetation/Revegetation:

1. WHEREVER POSSIBLE, PRESERVE EXISTING TREES, SHRUBS, GRASSES AND OTHER VEGETATION.
2. SEED, SOD OR MULCH BARE SOIL AS SOON AS POSSIBLE. VEGETATION IS THE MOST EFFECTIVE WAY TO CONTROL EROSION.

Stabilized Construction Entrances (See Detail):

1. THE STABILIZED CONSTRUCTION ENTRANCE SHALL BE INSTALLED BEHIND THE CURB AT THE FUTURE DRIVEWAY LOCATION. CALL 942-7500 FOR A CURB-CUT INSPECTION PRIOR TO INSTALLATION. DO NOT PILE SOIL OR ROCK IN THE GUTTER.
2. THE ENTRANCE SHALL BE COMPOSED OF 2-INCH TO 3-INCH FRACTURED AGGREGATE STONE (WITH MINIMAL FINES). LAY THE STONE A MINIMUM OF 6" DEEP, AT LEAST 8-FEET WIDE AND A MINIMUM OF 15-FEET ONTO THE SITE, MEASURED FROM BACK OF CURB, OR THE DISTANCE TO THE FOUNDATION, WHICHEVER IS LESS.

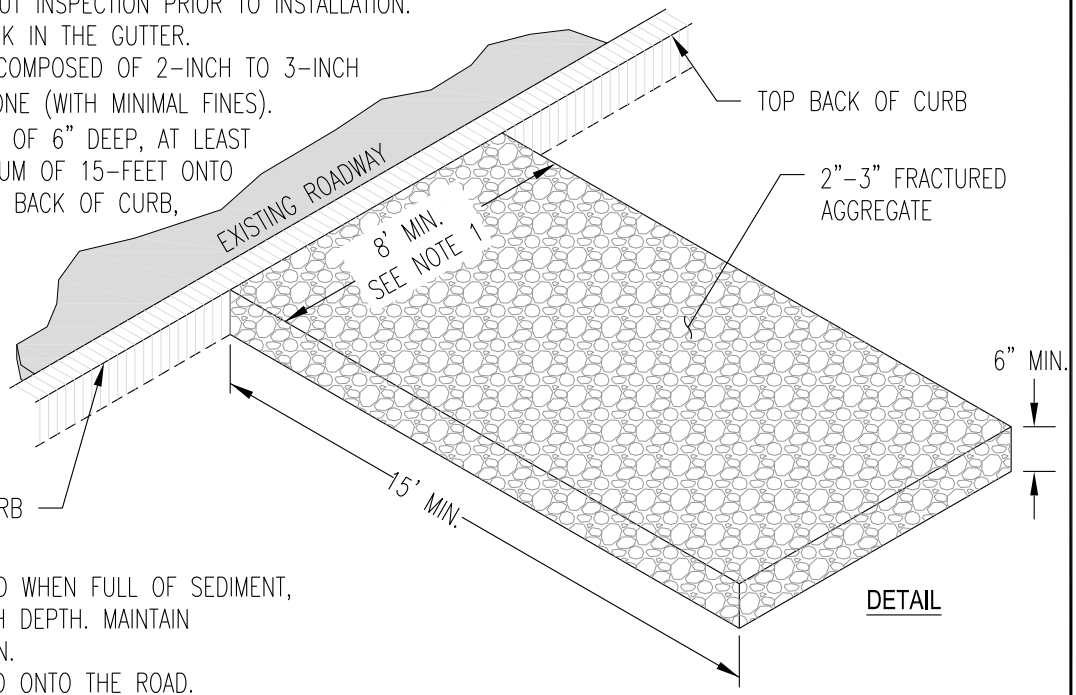

DETAIL

3. REPLACE STONE AS NEEDED WHEN FULL OF SEDIMENT, AND TO MAINTAIN A 6-INCH DEPTH. MAINTAIN THROUGHOUT CONSTRUCTION.
4. PREVENT TRACKING OF MUD ONTO THE ROAD.

Richland Washington

EROSION CONTROL PLAN
CONSTRUCTION BMP'S
SHEET 2 of 3

CIVIL & UTILITY ENGINEERING	
APPR. BY: PKR	DATE: 11.15
DRAWN BY: LD	DWG: S16
CAD FILE: 2014_S16-2_11_2015	

Silt Fences :*

1. INSTALL PRIOR TO LAND DISTURBANCE.
2. INSTALL ON DOWNSLOPE SIDES OF SITE, PARALLEL TO CONTOUR OF THE LAND.
3. EXTEND ENDS UPSLOPE ENOUGH TO KEEP PONDING WATER BEHIND FENCE.
4. LEAVE NO GAPS. OVERLAP SECTIONS OF SILT FENCE, OR TWIST ENDS OF SILT FENCE TOGETHER.
5. INSPECT AND REPAIR ONCE A WEEK AND AFTER ANY RAIN/SNOWMELT EVENTS. REMOVE SEDIMENT IF DEPOSITS REACH HALF THE FENCE HEIGHT.
6. MAINTAIN UNTIL LANDSCAPING OR HYDROSEED IS ESTABLISHED.

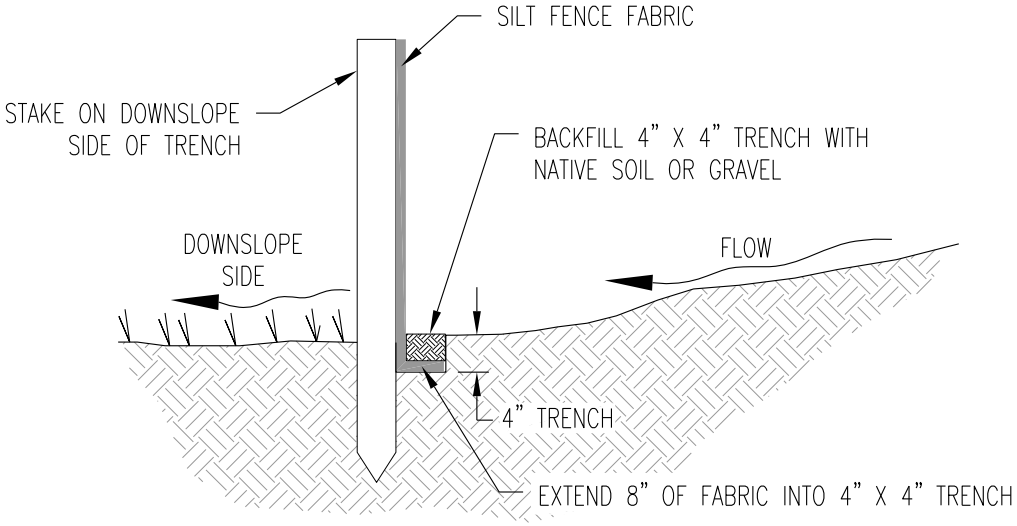

SILT FENCE INSTALLATION CROSS SECTION

*ALTERNATIVELY, IF THE STREET IS ON THE LOW SIDE OF THE LOT, GRADE THE LOT 5' BEHIND THE CURB, THEN STABILIZE WITH 2-INCH TO 3-INCH FRACTURED AGGREGATE (6" DEEP). THIS CAN BE ALLOWED IN LIEU OF SILT FENCE.

Richland Washington

EROSION CONTROL PLAN CONSTRUCTION BMP'S SHEET 3 of 3

CIVIL & UTILITY ENGINEERING	
APPR. BY: PKR	DATE: 05.14
DRAWN BY: LD	DWG: S16
CAD FILE: 2014_S16-3_05_2014	

BUILDER IS RESPONSIBLE FOR THE WATER SERVICE IF DAMAGED - A $300.00 MINIMUM FEE WILL BE CHARGED. * ADDITIONAL FEES MAY BE CHARGED FOR EXTENSIVE DAMAGE OVER $300.00.

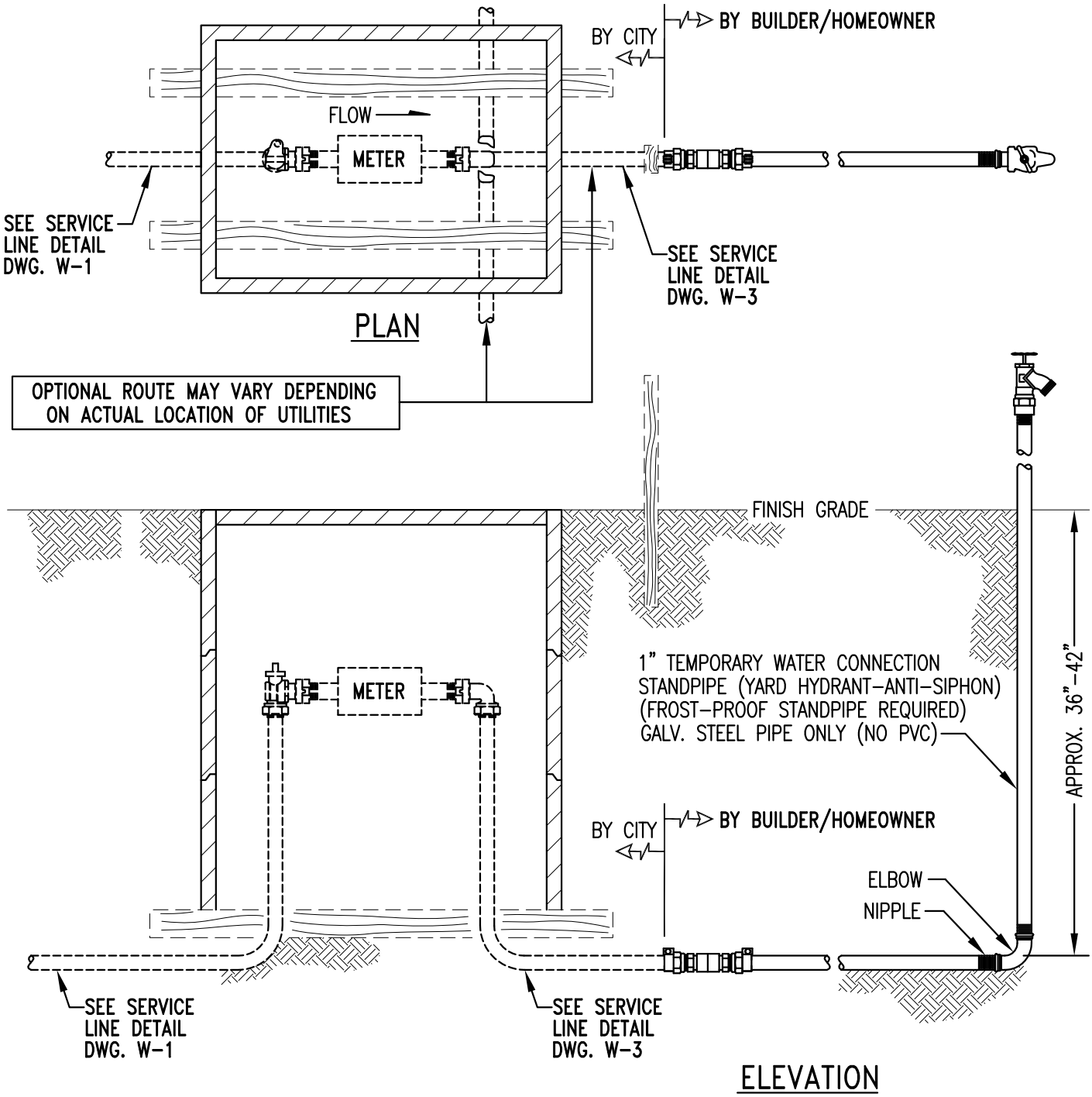

Richland Washington	WATER SERVICE CONNECTION FOR NEW RESIDENTIAL LOT	CIVIL & UTILITY ENGINEERING
		APPR. BY: PKR — DATE: 03.2012
		DRAWN BY: SC NYBY — DWG: W18
		CAD FILE: 2012_W18_03_2012